STANDARD®

WIDE BAND RECEIVER

AX700E/ES

SERVICE MANUAL

STANDARD COMMUNICATIONS
A DIVISION OF MARANTZ JAPAN INC

Copyright © 1989
Marantz Japan Inc.
All Rights Reserved
Printed in Japan

Matthias Bopp ***www.dd1us.de***

CONTENTS

I. GENERAL INFORMATION 2
1. CONTROLS AND CONNECTIONS 3
2. MAINTENANCE 4
2.1 Disassembly 4
2.1.1 Top and Bottom Covers, Rear Panel and Main Board (PM01) 4
2.1.2 Sub-Control Board (PD03) 4
2.1.3 Main Control Board (PD01), Keyboard (PD02), and Volume Board (PM02) 5
2.2 Test Set Up 5
2.3 Alignment Reference Points 6
2.4 Alignment/Performance Check 8
2.4.1 Display Check 8
2.4.2 Current Drain and Voltage Level Checks 8
2.4.3 PLL Synthesizer for First Local Circuit 8
Setting the VCO Frequency 8
2.4.4 PLL Synthesizer for Second Local Circuit 8
1) Setting the VCO Voltage 8
2) Setting the VCO Frequency 8
2.4.5 Sensitivity 8
1) General Sensitivity 8
2) Confirmation of Sensitivity for Different Modes 8
– FM-N Mode – 8
– FM-W Mode – 8
– AM Mode – 8
2.4.6 Bandscope: PLL Synthesizer for Analyzer Circuit 9
1) Setting the AM-IF Level 9
2) Setting the VCO Voltage 9
3) Setting the Bandscope Display Level 9
2.4.7 Setting the Muting Level in the FM-W Mode 9
3. SPECIFICATIONS 10
4. THEORY OF OPERATION 11
4.1 Power Supply Circuitry 11
4.2 Front End: Tuner Circuit (RF Amplifier/First Mixer/First IF Amplifier) 11
4.3 Analyzer Circuit 12
4.4 Second IF Circuit: Band Switching Circuit 12
4.5 Third IF Circuit and Detector Circuit 12
4.5.1 FM-W Mode 12
4.5.2 FM-N/AM Modes 13
4.6 Automatic Gain Control (AGC) Circuitry 13
4.7 Audio Signal Switching Circuit 13
4.7.1 Detector Circuit for Audio Scanning 13
4.7.2 Mute Circuit Operation Chart for Different Modes 14
4.7.3 Audio Mute Circuit and Squelch Circuit 15
4.7.4 Mode Voltage Mute Circuit 15
4.8 PLL Synthesizer 15
4.8.1 First Local Circuit 15
4.8.2 Second Local Circuit/Analyzer Circuit 16
1) Second Local Circuit 16
2) Analyzer Circuit 17
4.9 Controll 18
4.9.1 Main Microprocessor Q101 18
4.9.2 Submicroprocessor Q301 19
5. BLOCK DIAGRAM 22
6. EXPLODED PARTS VIEW AND PARTS LIST 24
6.1 General 24
6.2 Chip Parts 24
6.3 Ordering Replacement Parts 24
7. SCHEMATIC DIAGRAM 34
8. COMPONENT OVERLAY 36

Matthias Bopp *www.dd1us.de*

I. GENERAL INFORMATION

This section provides general information on the AX700E/ES VHF/UHF wideband receivr AX700E/ES.

- Indicated frequency is divided into the following four (4) band zone by B1, B2, B3, and BU terminals of tuners (P053).

  B1 ..... 50.00 to 87.75 MHz
  B2 ..... 95.75 to 215.75 MHz
  B3 ..... 221.75 to 473.75 MHz
  BU ..... 475.75 to 904.995 MHz

- The following three modes have been programmed into the demoudulator, from which one mode can be selected.

  RM-W (wide),
  FM-N (narrow)
  AM

- There are six channel steps: 5 (AJ = Fine Adjustable), 1 (UP/DOWN key), 10, 12.5, 20, and 25 kHz.

- Reception systems are as follows:

  FM-W ..... Double conversion superheterodyne system
  First IF ..... 46 MHz
  Second IF ..... 10.7 MHz
  Third IF ..... 455 KHz

  FM-N/AM ..... Triple conversion superheterodyne system
  First IF ..... 46 MHz
  Second IF .... 10.7 MHz
  Third IF ..... 455 kHz

- The spectrum level on the band scope (spectrum analyzer) is displayed by the digital conversion of the level detection output. The adjustment of the signal intensity (S) on the bandscope for the maximum level "0V" (S11) is based on the intensity of an incoming signal of 60 dBμV. The display width of the bandscope can be set to 1 MHz, 250 (260) kHz, or 100 kHz.

- The control and display functions of the AX700E/ES are carried out by 8-bit main and submicroprocessors.

- PLL synthesizers are used for the first IF local and second IF local circuits and the analyzer circuit.

- The tuner circuit is composed of an RF amplifier for B1 to B3, an RF amplifier for BU, a mixer, a VCO, and a first IF amplifier. The VCO generates a frequency range of 96.00 to 950.995 MHz that is 46 MHz higher than the reception frequency. Band switching between B1, B2, B3, and BU is carried out using band data and the various circuits according to the designated mode.

Matthias Bopp www.dd1us.de

1. CONTROLS AND CONNECTIONS

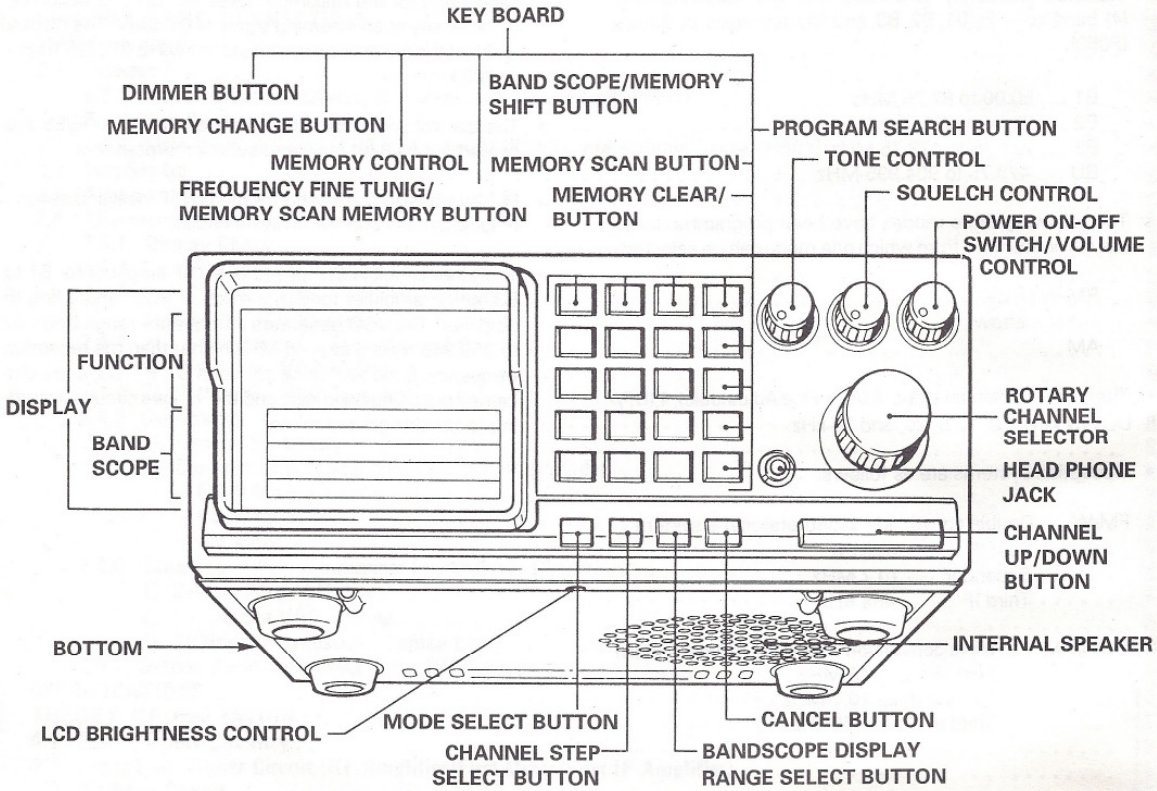

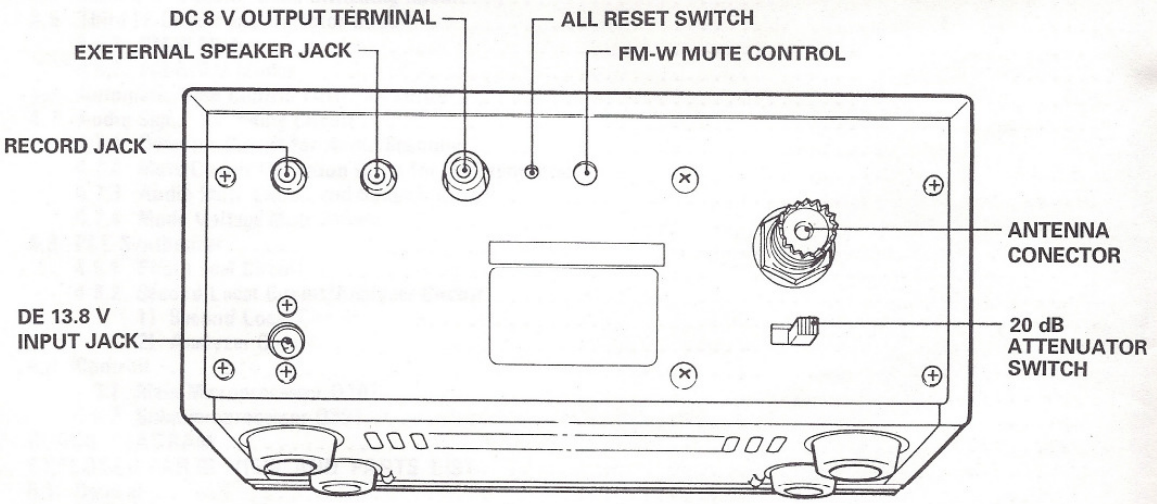

Matthias Bopp *www.dd1us.de*

2. MAINTENANCE

2.1 Disassembly

Before starting the adjustment procedures, be sure that the power switch of the receiver is turned off, and that the power supply and other connection cords are removed. Special care must be taken not to damage wiring or soldered parts when boards are removed.

2.1.1 Top and Bottom Covers, Rear Panel and Main Board (PM01)

a) Remove the four screws Ⓐ securing the upper cover and the five screws Ⓐ securing the bottom cover. The bottom cover can be removed by pulling it directly away from the unit. To remove the upper cover, slide it backward.
b) Remove the four screws Ⓑ and remove the rear panel.
c) Remove the four screws Ⓒ and remove the main board.

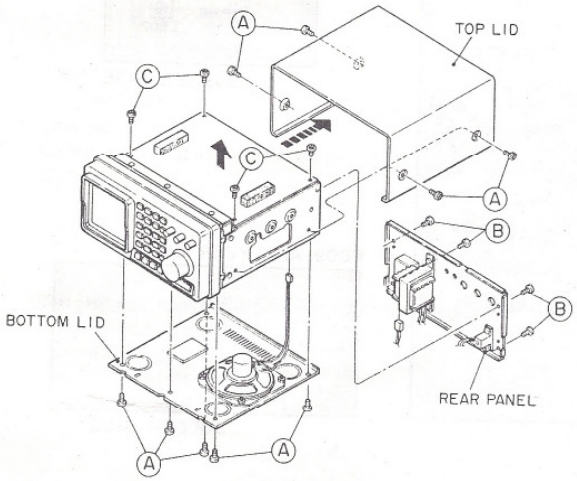

Figure 2-1

2.1.2 Sub-Control Board (PD03)

a) Remove the four screws Ⓓ and remove the front panel.
b) Remove the six screws Ⓔ. Open the shield case slightly by 2–3 cm and confirm that there are three connectors. Loosen the connectors and pull out the wiring board.
c) Remove the two screws Ⓕ and the five screws Ⓖ and remove the sub-control board.

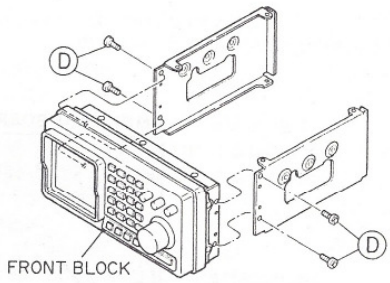

Figure 2-2

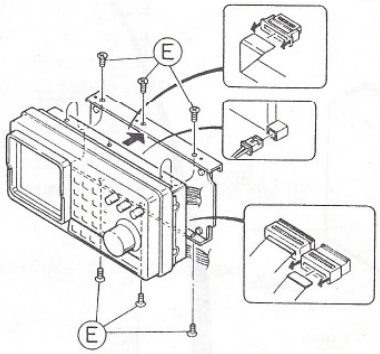

Figure 2-3

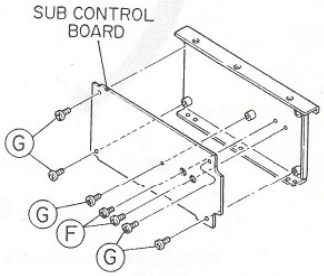

Figure 2-4

Matthias Bopp www.dd1us.de

2.1.3 Main Control Board (PD01), Keyboard (PD02), and Volume Board (PM02)

a) Remove the upper and lower covers and rear panel as described in section 2.1.1 (a) and (b).
b) Remove the rotary channel selector assembly [D] and the two screws [E] and remove the front case.
c) Remove the six screws [F] and remove the main control board.
d) Remove the seven screws [G] and remove the keyboard.
e) Remove the three rubber caps [H] and the three special screws and remove the volume board.

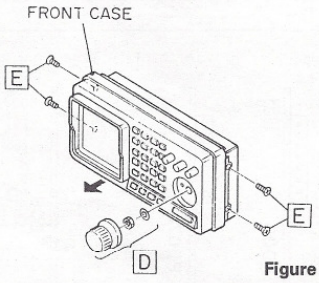

Figure 2-5

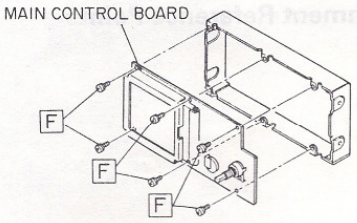

Figure 2-6

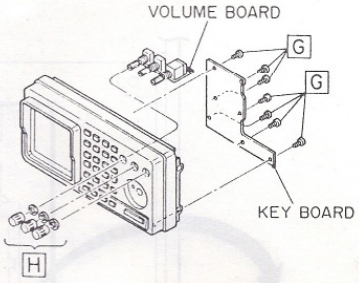

Figure 2-7

2.2 Test Set Up

For proper adjustment, the test equipment must be kept calibrated and maintained. Turn on the power supply and ensure that the test equipment is stable before starting performance test and adjustment procedures.

Conditions

Supply voltage	13.8 V DC
AF dummy load	8Ω
Audio output	500 mW
Adjustment frequency	145.500 MHz
Standard modulation	FM-N ±3.5 kHz with 1 kHz FM-W ±75.0 kHz with 1 kH AM 30% with 1 kHz
Other conditions.....	Attenuator switch OFF

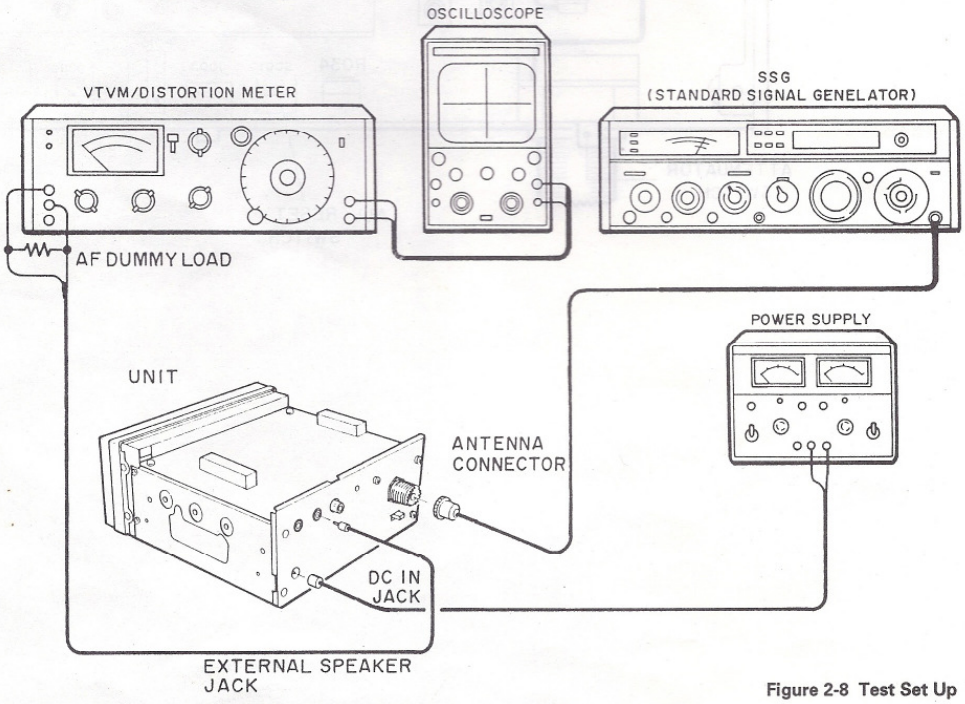

Figure 2-8 Test Set Up

Matthias Bopp www.dd1us.de

2.3 Alignment Reference Points

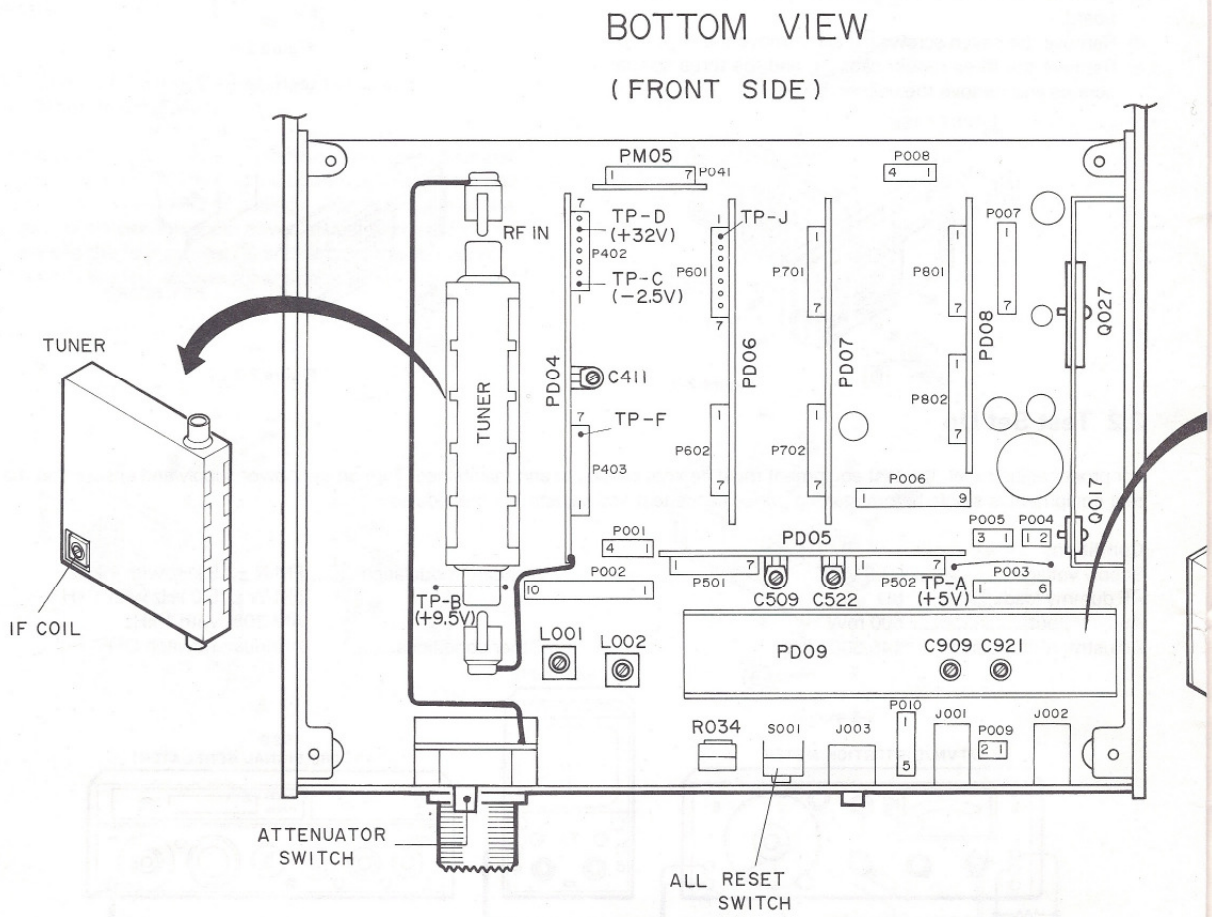

Matthias Bopp www.dd1us.de

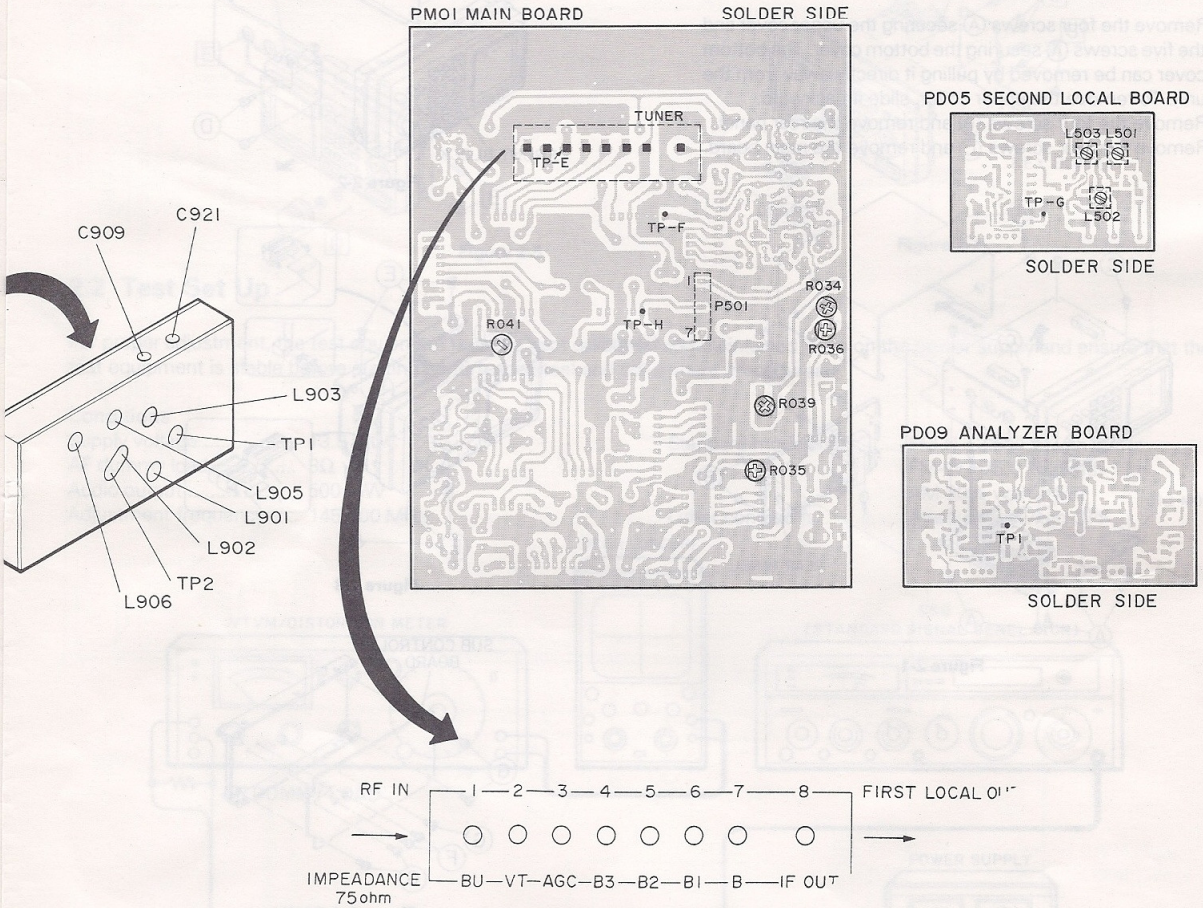

Matthias Bopp www.dd1us.de

2.4 Alignment/Performance Check

A voltmeter and frequency counter with sufficiently high impedance must be used for adjustment purposes.
Be sure to first perform the "Display Check" before proceeding to any adjustment.
After the adjustments, press the All Reset switch while the power of the unit is ON to reset the unit.

2.4.1 Display Check

a) With the All Reset switch held depressed, press the Power ON-OFF switch to ON.
b) Press the "1" key (AX700E) or "7" key (AX700ES) on the keyboard three times and check that all of the function display elements on the bandscope are lit. Otherwise, return to step a).
c) Press the Power ON-OFF switch to OFF, and proceed to the following adjustments.

2.4.2 Current Drain and Voltage Level Checks

a) Turn the Volume control of the unit to the fully counter-clockwise position.
b) Press the Power ON-OFF switch of the unit to ON, then check that the current flowing in the unit is no more than 750 mA.
c) To confirm the voltage levels, connect a voltmeter to TP-A for 4.5 to 5.5 V, TP-B for 8.5 to 10.5 V, TP-C for –3.0 to –2.0 V, and TP-D for 31.0 to 32.0 V.

2.4.3 PLL Synthesizer for First Local Circuit

Setting the VCO Frequency
a) Connect a frequency counter to TP-F (first local frequency of pin 7 of P403).
b) Set the displayed frequency of the receiver to 854.000 MHz.
c) Adjust the trimmer C411 until the frequency at TP-F falls within 900.000 MHz ±50 Hz.

2.4.4 PLL Synthesizer for Second Local Circuit

NOTE: Remove the rear panel and then the analyzer board (PD09) from the main board (PM01) before starting the adjustment of the second local circuit. After adjustment, the analyzer board must be replaced in its original position.

1) Setting the VCO Voltage
a) Pull out the core of L503 until the upper surface of the coil.
b) Connect a voltmeter to TP-G (hot side of the C525).
c) Adjust the trimmer C509 until the voltage at TP-G falls about 2.5 V.
d) Adjust L503 to maximize the voltage of C525.
e) Adjust trimmer C509 so that the voltage of C525 falls 2.5 V.

2) Setting the VCO Frequency
a) Connect a standard signal generator (SSG) to the antenna connector.
b) Set the SSG frequency to 145.500 MHz and 80 dBu without modulation.
c) Connect a frequency counter to TP-H (10.7 MHz IF at pin 4 of P501).
d) Adjust trimmer C522 until the frequency as read on the frequency counter falls within the range of 10.7000 MHz±100 Hz.
e) Connect a frequency counter to TP-J (455 kHz IF at pin 1 of P601).
f) Check that the frequency counter reads 455 kHz ±50 Hz. If the frequency counter reading is out of this range, adjust trimmer C522.

2.4.5 Sensitivity

Connect a SSG to the antenna connector.

1) General Sensitivity
a) Set the SSG frequency to 145.500 MHz±3.5 kHz deviation and modulate for a 1 kHz tone FM.
b) Set the reception frequency of the receiver to 145.500 MHz and select the AM mode by pressing the mode selection button.
c) Adjust the IF output coil of the tuner and the L001 and L002 so that the best SINAD with the maximum wave form and the minimum distortion is obtained on the oscilloscope.
d) While observing the oscilloscope, adjust L501 and L502 so that the best SINAD available (with maximized waveform and minimum distortion) is obtained.

2) Confirmation of Sensitivity for Different Modes
– FM-N Mode –
a) Set the SSG frequency to 145.500 MHz±3.5 kHz deviation and modulate for a 1 kHz tone FM.
b) Set the reception frequency of the receiver to 145.500 MHz and set to the FM-N mode by pressing the mode selection button.
c) Measure the 12 dB SINAD and confirm that the ouput level of the SSG does not exceed 0.63 μV.

– FM-W Mode –
a) Set the SSG frequency to 145.500 MHz±75 kHz deviation and modulate for 1 kHz tone FM.
b) Set the reception frequency of the receiver to 145.500 MHz and set to the FM-W mode by pressing the mode selection button.
c) Measure the 12 dB SINAD and confirm that the output level of the SSG does not exceed 1.26 μV.

– AM Mode –
a) Set the SSG frequency to 145.500 MHz and modulate for 30% AM.
b) Set the reception frequency of the receiver to 145.500 MHz and set to the AM mode by pressing the mode selection button.
c) Measure to 10 dB S/N and confirm that the output level of the SSG does not exceed 1.0 μV.

Matthias Bopp www.dd1us.de

2.4.6 Bandscope: PLL Synthesizer for Analyzer Circuit

NOTE: Remove the rear panel before starting the adjustment of the analyzer circuit.

1) Setting the AM-IF Level

a) Pull out the core of L903 until the upper surface of the coil.
b) Set the SSG frequency to 145.500 MHz and 10 dBu, with 30% AM modulation.
c) Set the reception frequency to 145.500 MHz and set the Mode select button to the AM mode.
d) Connect a voltmeter to TP-E pin 3 of P053, and adjust R041 so that the voltage reading is lower by 0.4 V than the voltage when the SSG output is switched OFF.

2) Setting the VCO Voltage

a) Remove SSG from the antenna connector.
b) Set the reception frequency to 145.500 MHz and set to the FM-N mode by pressing the mode selection button. Press the bandscope display level selection button to set the scroll width of the bandscope to 100 kHz.
c) Connect a voltmeter to TP1 on the analyzer board.
d) Confirm the variation range of voltage. Adjust trimmer C909 until the center voltage is about 2.2 V.
e) Adjust L903 to maximize the voltage at TP1.
f) Adjust C909 so that the voltage at TP1 falls 2.2 V.
g) Set the SSG frequency to 145.500 MHz and 57 dBμ without modulation.
Check that the S meter display level attains the 0 V line in any mode (FM-W, FM-N, AM).
h) Set the SSG frequency to 659.000 MHz and 57 dBμ without modulation.
i) Set the displayed frequency of the unit to the same as the set frequency of the SSG. With this conditioned, check that the S meter display level attains the "S9" line in any mode (FM-W, FM-N, AM).

3) Setting the Bandscope Display Level

a) Connect a SSG to the antenna connector.
b) Set the SSG frequency to 145.500 MHz and 10 dBμ without modulation.
c) Adjust trimmer C921 for the maximum display level at a receive frequency of 145.500 MHz.
d) Adjust L902, L905, and L906 in this order for the maximum display level.
e) Set the SSG frequency to 145.500 MHz and 47 dBμ without modulation. Turn R039 to the fully counterclockwise position, and adjust resistor R035 until the display level is "0 V" (S11).
f) Set the SSG frequency to 145.500 MHz and 7 dBμ without modulation. Adjust resistor R039 until the display level is "S7".

2.4.7 Setting the Muting Level in the FM-W Mode

a) Set the SSG frequency to 50.000 MHz and –1 dBμ, with 1 kHz ±75 kHz tone FM modulation.
b) Set the displayed frequency of the unit to 50.000 MHz, and set the Mode select button to the FM-W mode.
c) Turn R034 to the fully clockwise position, and adjust R036 so that the monitored sound can be heard from the speaker.
d) Set the SSG frequency to 50.000 MHz and –3 dBμ, with 1 kHz ±75 kHz tone FM modulation. With this condition, check that the monitored sound is not heard from the speaker.
e) Set the SSG frequency to 50.000 MHz and 1 dBμ, with 1 kHz ±75 kHz tone FM modulation. With this condition, check that the monitored sound is heard from the speaker.
f) Set the SSG frequency to 94.000 MHz and –3 dBμ, with 1 kHz ±75 kHz tone FM modulation.
g) Set the displayed frequency of the unit to the same as the set frequency of the SSG, and set the Mode select button to the FM-W mode. With this condition, check that the monitored sound is not heard from the speaker.
h) Set the SSG frequency to 94.000 MHz and 1 dBμ, with 1 kHz ±75 kHz tone FM modulation. With this condition, check that the montored sound is heard from the speaker.
i) Set the SSG frequency to 145.000 MHz and –3 dBμ, with 1 kHz ±75 kHz tone FM modulation.
j) Set the displayed frequency of the unit to the same as the set frequency of the SSG. With this condition, check that the monitored sound is not heard from the speaker.
k) Set the SSG frequency to 145.000 MHz and 1 dBμ, with 1 kHz ±75 kHz tone FM modulation.
l) Set the displayed frequency of the unit to the same as the set frequency of the SSG, and set the Mode select button to the FM-W mode. With this condition, check that the monitored sound is heard from the speaker.

A 2

Matthias Bopp www.dd1us.de

3. SPECIFICATIONS

Frequency Range	50.000 to 904.995 MHz (Specification gurantee range for Model AX700E) 144.000 to 145.995 MHz 430.000 to 439.995 MHz (Specification gurantee range for Model AX700ES) 50.000 to 904.995 MHz (Range indicated in LCD display for Model AX700ES)
Antenna Impedance	50 Ω
Frequency Step	10, 12.5, 20, and 25 kHz (AJ MODE 5 kHz, UP/DOWN BUTTON 1 kHz)
Number of Memory Channels	100 channels
Number of Program Search Memory Bands	10 bands
Sensitivity	AM (10 dB SINAD): 3 μV or less FM-N (12 dB SINAD): 1.5 μV or less FM-W (12 dB SINAD): 1 μV or less at 83 MHz
Squelch Sensitivity (FM-N Mode)	0.2 μV or less
Audio Power Output	External Speaker Terminal: 1.8 W or more, 8 Ω, 10% distortion, Input signal of FM 1 kHz±3.5 DEV Recorder Terminal: 30 mW (load of 100 kΩ)
8 V Output Terminal	8 V 40 mA maximum
Power Supply	DC 13.8 V±15%
Current Drain	1 A (audio output 2 W)
Ground	Negative Grounding
Operating Temperature Range	0 – 50°C
Dimensions	75-H x 180-W x 180-D mm (excluding projections)
Weight	2.1 kg (including the antenna stand)

Performance specifications are nominal, Unless otherwise indicated, and are subject to change without notice.

Matthias Bopp www.dd1us.de

4. THEORY OF OPERATION

4.1 Power Supply Circuitry

The following voltage levels are used for the AX700E/ES:

Table 4-1 Voltage

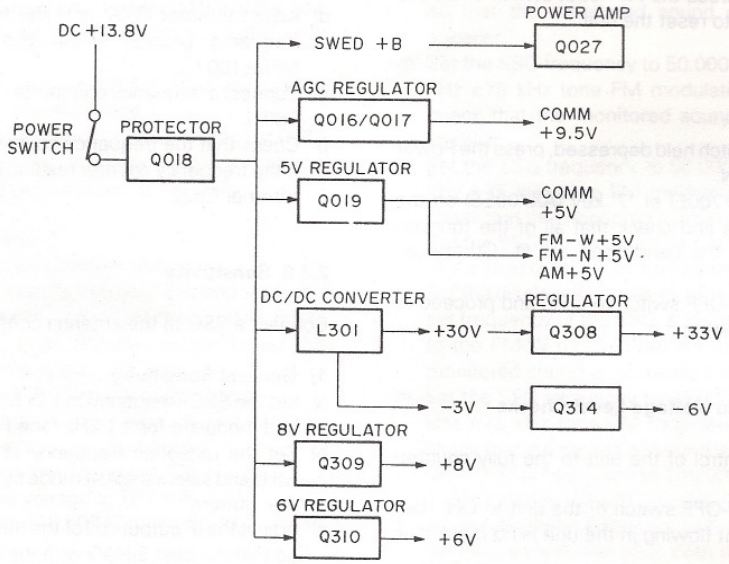

4.2 Front End: Tuner Circuit (RF Amplifier/First Mixer/First IF Amplifier)

The signal picked up by the rod antenna is passed through the 20 dB attenuator circuit (R051 and R052), and applied to the RF input terminal of the tuner circuit P053. The tuner circuit contains an RF amplifier for the B1–3 and BU bands, mixer, VCO, and first IF amplifier. The VCO generates the first local frequency of 96.00–950.995 MHz, which is 46 MHz higher than the incoming signal, over all the bands. The signal input to the tuner circuit is amplified by the RF amplifier and passed through the mixer and IF amplifier. This signal comes out of the IF output terminal and is converted to the 46 MHz first IF signal. The 46 MHz first IF signal is passed through the diode IF switch Q001, analyzer circuit, Q001 buffer Q005, and band switching circuit Q006–Q009, after which the signal is applied to the second IF circuit.

B1, B2, B3, and BU on the tuner are bias terminals for their corresponding bands. These bands are controlled by applying band data from the main microprocessor Q101 to pins 1 and 2 of band selector Q407 and controlling Q407 output terminal pins 12–15. Pins 12–15 are connected to the two-stage band switch, after which they are connected to the bias terminal for each band. Bias voltage is +9.5 V. Voltage of +0.5 to +9.5 V is applied to the VT terminal for each band to control the frequency (first local frequency) of the VCO located inside the tuner.

The first local frequency is output from the first local output terminal, passed through amplifier Q416 and Q401, and applied to the PLL prescaler for the first local Q402.

Band Selector Q407 Function List Table 4-2

Pin No.	Input		Output			
	1	2	15	14	13	12
Level	L	L	H	L	L	L
	H	L	L	H	L	L
	L	H	L	L	H	L
	H	H	L	L	L	H

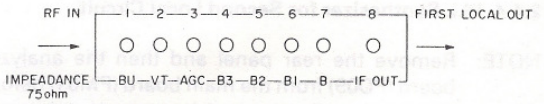

Figure 4-1 Tuner Jack (P053)

Matthias Bopp www.dd1us.de

4.3 Analyzer Circuit

The analyzer circuit is designed to convert the incoming signal to DC voltage to pick up the level detection output. This output is converted to a digital signal by the A/D converter Q302, and displayed as a spectrum level on the bandscope by common and column drivers Q107–Q109.
The 46 MHz first IF signal is passed through the diode IF switch Q001, after which the input level is adjusted by resistor R037, and the signal is applied to pin 1 of the second IF IC Q901 of the analyzer, circuit. Q901 is composed of an amplifier, mixer and VCO. Pin 6 outputs the 10.7 MHz second IF signal. This signal is passed through the crystal filter F901, applied to the third mixer Q907, and heterodyned with the 10.245 MHz signal on the third local oscillator. The 455 kHz third IF signal created by Q907 is passed through the tuning circuit L906 and ceramic filter F902, and applied to pin 1 of IF IC Q909. Q909 contains an amplifier and detector, and outputs the level detection signal to pin 3. The level detection output in proportion to the field strength of the incoming signal is adjusted for the display level by resistor R035 on the rear panel, and applied to pin 2 of the A/D converter Q302 of the sub-controller. Q302 outputs the detection signal, which was converted to a digital signal, from pins 4–9, 11, and 12 to the sub-microprocessor Q301. The digital signal is displayed on the LCD through the common driver Q107 and column drivers Q108 and Q109.

4.4 Second IF Circuit: Band Switching Circuit

The 46 MHz first IF signal is passed through the diode IF switch Q001 buffer Q005, and applied to band switching circuits Q006 and Q008 or Q007 and Q009 by setting the receiver to the desired mode. When the receiver is set to the FM-N or AM mode, band switching circuits Q006 and Q008 are forward biased. The 46 MHz IF signal is passed through the band pass filter F001 and coupled with pin 1 of the second IF IC Q501.
When the receiver is set to the FM-W mode, band switching circuits Q007 and Q009 are forward biased, and the 46 MHz IF signal is coupled with pin 1 of Q501.

Q501 contains an amplifier, mixer, and VCO. Pin 6 outputs the 10.7 MHz second IF signal. The VCO output frequency of pin 7 of Q501 is applied to pin 3 of the PLL IC Q503.

4.5 Third IF Circuit and Detector Circuit

The 10.7 MHz second IF signal on pin 6 of Q501 is passed through the IFT L502, and applied to the detector circuit Q702 for FM-W/AM modes and the third IF circuit Q602.

- FM-W mode
  The second IF signal is detected by the detector circuit Q702 for FM-W and AM modes to obtain a voice signal.
- FM-N mode
  The second IF signal is converted to 455 kHz by the third IF circuit Q602 and detected to obtain a voice signal.
- AM mode
  The second IF signal is converted to 455 kHz by the third IF circuit Q602, and input to and detected by the detector circuit Q702 for FM-W and AM modes to obtain a voice signal.

4.5.1 FM-W Mode

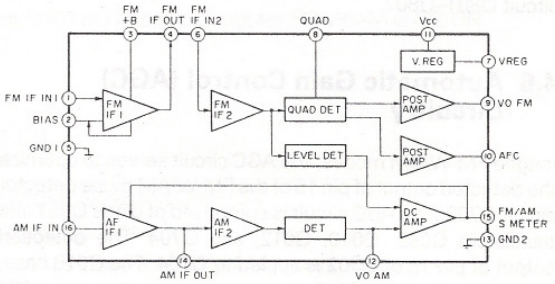

Figure 4-2 FM/AM IC Q702

In FM-W mode, the second IF signal is passed through the IF amplifier Q701 and crystal filter F701 and applied to pin 1 of the FM IF input terminal of detector circuit Q702 for FM-W/AM modes. This signal is then passed through the internal amplifier, the crystal filter F703, which has been connected externally to pins 4 and 6, the quadrature detector, and the amplifier. The FM-W detection signal is output to pin 9.
The 455 kHz third IF signal, which passed the band pass filter F703, is applied from pin 5 of the third IF circuit Q602 to Q702 AM IF input terminal pin 16. During the FM-W mode, the 455 kHz third IF signal is not input to Q702 AM IF input terminal pin 16 because of FM-W +5 V being supplied to the base of the AM IF switch Q703, which creates ground potential.

Matthias Bopp www.dd1us.de

4.5.2 FM-N/AM Modes

In FM-N mode, the 10.7 MHz second IF signal is passed through the buffer amplifier Q601 and a pair of crystal filters F601 and input to pin 16 of the third IF circuit Q602. Q602 contains an amplifier, mixer, 10.245 MHz local oscillator, limiter circuit, detector circuit, and peripheral circuits. the FM-N detection signal is output from pin 9 of Q602. This signal is passed through the de-emphasis circuit R610, C613, R611, and C624, and applied to the audio signal switching circuit. Part of the 455 kHz third IF signal on pin 5 is passed through the buffer amplifier Q606 and band pass filter F703 and input to AM IF input terminal pin 16 of detector circuit Q702 for FM/AM modes.
In AM mode, AM +5 V is applied to the buffer amplifiers. Q601 and Q606 and the 455 kHz third IF signal is input to AM IF input terminal pin 16 of detector circuit Q702. This signal is passed through the second stage of the internal amplifier and AM detector, which outputs the AM detection signal to pin 12. The AM detection signal is passed through the de-emphasis circuit R711 and C720 and applied to the audio signal switching circuit Q801–Q807.

4.6 Automatic Gain Control (AGC) Circuitry

In tghe FM-W/AM modes, the AGC circuit serves to optimize the detected output of pin 15 of the FM-W/AM mode detector circuit Q702. The AGC circuit is composed of diode Q051 and transistors Q052, Q010, Q012, and Q704. The detection output of pin 15 of Q702 is appled to Q704. The Q010 base, Q011 collector, and Q012 base are connected to the Q704 emitter.
SWED+B is a constant voltage circuit consisting of Q016 and Q017 and stabilized at +9.5 V. a voltage of +9.5 V is divided into +6.5 V by resistors R017 and R018 of the AGC circuit. This reference voltage of +6.5 V is applied to the AGC circuit Q012 collector, pin 3 AGC terminal of the tuner circuit P053, and the amplifier Q052 base.
The detected output of pin 15 of Q702 is in proportion to the intensity of the incoming signal. The reference voltage of +6.5 V is reduced through Q012 until the detected voltage of pin 15 of Q702 is optimized.

4.7 Audio Signal Switching Circuit

The audio signal switching circuit applies mode data on pin 13 of the interface Q102 (AM), pin 14 (FM-N), and pin 15 (FM-W) to the base of the DC switch Q022 for the AM mode, Q021 for the FM-N mode, and Q020 for the FM-W mode, and is switched among these modes according to the mode selected on the receiver. Table 4-3 shows the active circuits for different modes. The voice signal passed through the audio signal switching circuit is applied to the audio scanning circuit Q808 and mute circuits Q805 and Q807.

4.7.1 Detector Circuit for Audio Scanning

When the audio scan mode (AF.SCAN) is selected from the various scan modes, the voice signal input to the detector circuit for audio scanning is passed through the amplifier Q808. This signal is converted to DC voltage by the voltage doubler rectifier Q809 and Q810 and applied to the switch Q811. Q811 goes "low" when a voice signal is present. This Q811 collector output is fed to pin 63 of the main microprocessor Q101 and acts as a control signal for audio scanning. When pin 63 of Q101 is low, the PLL circuit is controlled to stop scanning temporarily. When pin 63 goes high, scanning is resumed.

Matthias Bopp www.dd1us.de

4.7.2 Mute Circuit Operation Chart for Different Modes

The following chart shows the activation of mute circuits for different modes:

Table 4-3 Active Circuits for Different Modes

- Mode Data
  - DC Switch for FM-W Q020 ON
    - Mute Switches Q041 and Q045 ON
      - AGC Switch Q014 ON
    - Band Switches Q007 and Q009 ON
      - FM-AGC switch Q011 OFF through Q023
    - Audio Signal Switching Circuit Q803 ON
      - Applied to Detector Circuit for Audio Scanning Circuit Q808 and Mute Circuits Q805 and Q807
    - IF Switch Q703 of Detector Circuit for FM-W/AM Q702 ON
  - DC Switch for FM-N Q021 ON
    - Mute Switches Q042 and Q045 ON
      - AGC Switch Q014 ON
    - Band Switches Q006 and Q008 ON through Q025
      - FM-AGC Switch Q011 OFF through Q023
    - Audio Signal Switching Circuit Q801 ON
      - Applied to Detector Circuit for Audio Scanning Q808 and Mute Circuits Q805 and Q807
    - Third IF Circuit Q602, Q601, and Q606 ON
  - DC Switch for AM ON
    - Mute Switches Q043 and Q045 ON
      - AGC Switch Q014 ON
    - Band Switches Q006 and Q008 ON through Q026
    - Audio Signal Switching circuit Q802 ON
      - Applied to Detector Circuit for Audio Scanning Circuit Q808 and Mute Circuits Q805 and Q807
    - Third IF Circuit Q602, Q601, and Q606 ON

Matthias Bopp www.dd1us.de

4.7.3 Audio Mute Circuit and Squelch Circuit

When no signal is being received in any of the FM-W, FM-N, and AM modes, a voice signal in these modes is muted because of reverse biased mute switch Q014 that controls audio mute circuits R816, R815, and Q805, R819, R818, and Q806.

– FM-N/AM Modes –

A squelch signal on pin 13 of the third IF circuit Q602 is used as an FM-N/AM mute signal.
When no signal is being received in FM-N or AM mode, the 30 kHz noise component passed through the noise amplifier is applied to the noise detector, after which the detected voltage is applied to pin 12. The internal squelch switch of Q602 connected to pin 12 is activated so that a squelch signal on pin 13 goes a logic "high" or "low", depending on the level of this detected voltage, in reference to 0.7 V. When there is no signal, a squelch signal on pin 13 goes "low", because pin 12 exceeds 0.7 V.
When a signal is being received, a logic "high" squelch signal is passed through the diode switch Q603 and applied to the mute switch Q014 base. The Q014 collector goes ground potential.
This supplies current to the audio mute circuit through the lines R015 and R017 connected to the collector. The audio mute mode is cleared and a voice signal that matches mode selection conditions is applied to the audio amplifier Q027.

– FM-W Mode –

The detected output of pin 15 of the detector circuit for the FM-W/AM modes is used as a FM-W mute signal. The detected output of pin 15 of Q702 is input to the AGC circuit Q704 and mute switch Q705. R034 is adjusted until the voltage at the Q705 base optimizes the muting level.

When a signal is being received, the mute switch Q705 collector goes ground potential and the next stage mute switch for the FM-W mode Q804 is reverse biased. A voltage of FM-W +5 V is applied to the Q804 collector. This voltage forward biases the diode switch Q806 and mute switch Q014. This forms ground potential at the Q804 collector. The audio mute mode is cleared as with the "FM-N/AM modes", and the FM-W mode voice signal is applied to the audio amplifier Q027.

4.7.4 Mode Voltage Mute Circuit

This circuit removes changes in DC which may occur when the mode is switched and would cause noise being heard from the speaker. The mode voltage of each mode – FM-W +5 V, FM-N +5 V, and AM +5 V – is applied to each of the mode voltage mute circuit Q041–Q044 with time constants provides by C041–C044. The "high" FM-W, FM-N/AM mute signal is applied to the switch Q045 collector, based on which Q045 is forward biased. The switch Q045 grounds surge voltage caused by switching the mode.

4.8 PLL Synthesizer

The AX700E/ES uses PLL synthesizers for the first and second local and analyzer circuits. PLL synthesizers used for the second local and analyzer circuits have a similar circuit structure.

4.8.1 First Local Circuit

– Block Diagram of PLL at 10 kHz Channel Step –

The PLL IC Q404 is composed of a reference divider (1/R), phase comparator (P/C), and programmable divider (1/N). VCO is incorporated into the tuner. VCO frequency is 96.00–950.995 MHz that is 46 MHz higher than that of the incoming signal. Division ratios 1/R and 1/N are determined by PLL serial data.

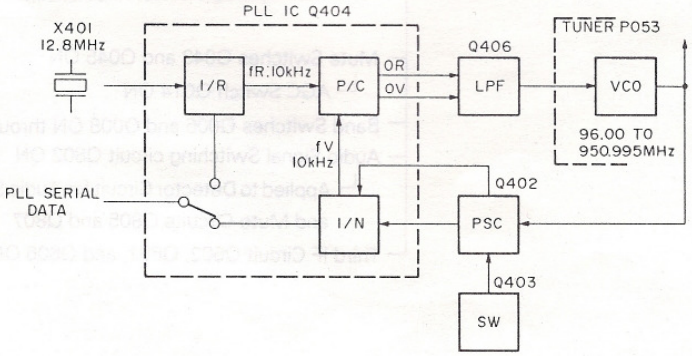

Figure 4-3 PLL Block Diagram

Matthias Bopp www.dd1us.de

– Equation for Calculating the N Number –

$$N = \frac{\text{Reception frequency + First IF (46)}}{\text{Channel step (0.01)}} \text{[MHz]}$$

Relationship Between fR/fV and OR/OV — Table 4-4

fR/fV Combination	Output	
	OV	OR
Leading fV>fR	Lo	Hi
Lagging fV>fR	Hi	Lo
Lock fV=fR	Hi	Hi

– Reference Frequency (fR) –

The 12.8 MHz crystal resonator X401 is used for the reference oscillator. An oscillator frequency of 12.8 MHz is divided to a reference frequency of 10 or 12.5 MHz by the reference divider.
There are four channel steps: 10, 12.5, 20, and 25 kHz. When the channel step is at 10 or 20 kHz, the reference frequency goes to 10 kHz. When the channel step is at 12.5 or 25 kHz, the reference frequency goes to 12.5 kHz.

– Programmable Divider –

The programmable divider and prescaler (PSC) Q402 form a pulse swallow counter.
Switch Q403 switches prescaler pin 6 to "high" or "low" according to the control signal from pin 25 of main microprocessor Q101. The prescaler is 1/64 when pin 6 is "high", and 1/128 when it is "low". The VCO oscillation frequency in the range of 96.00 to 950.995 MHz is processed by the prescaler and programmable divider to become the comparison frequency (fV) of 10 or 12.5 kHz.

– Phase Comparator/Low Pass Filter –

The phase comparator compares the phase of fR from the reference divider with that of fV from the programmable divider. Phase comparison output is output to pins 15 (OV) and 16 (OR) and applied to the low pass filter Q406 (1/2). The differential low pass filter converts the OR-OV relation to the shift voltage that is applied to VCO and determines the direction in which the VCO frequency shifts.

– Unlock Signal –

The lock detection output of pin 7 of PLL IC Q404 goes "low" when PLL is unlocked (asynchronous).

4.8.2 Second Local Circuit/Analyzer Circuit

1) Second Local Circuit

– Block Diagram of PLL at 1-kHz Channel Step –

PLL IC Q503 is composed of a reference divider (1/R), phase comparator (P/C), and programmable divider (1/N). The second IF IC Q501 VCO is used. VCO frequency is 35.3±0.005 MHz that is 10.7 MHz lower than that of the incoming signal. Division ratios 1/R and 1/N are determined by PLL serial data.

The PLL circuit for the second local circuit always obtains a second IF frequency of 10.7 MHz in concert with the PLL circuit for the first local circuit.

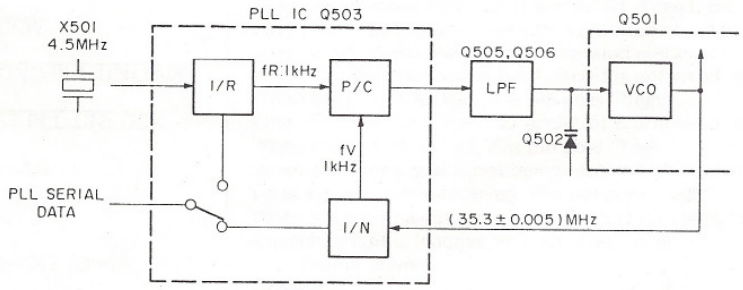

Figure 4-4 PLL Block Diagram

Matthias Bopp www.dd1us.de

– Equation for Calculating the N Number –

$$N = \frac{\{\text{First IF frequency } (46 \pm 0.005) - \text{Second IF frequency } (10.7)\}}{\text{Channel step } (0.001)} \text{ [MHz]}$$

– Reference Frequency (1/R) –

The 4.5 MHz crystal resonator X501 is used for a reference oscillator, and its frequency is divided into a reference frequency of 1 kHz by the reference divider built into the PLL IC Q503.

– Programmable Divider (1/N) –

A VCO frequency of 35.3±0.005 MHz is passed through the programmable divider and converted to a comparison frequency of 1 kHz.

– Phase Comparator (P/C) –

The phase comparator compares the phase of a reference frequency of 1 kHz with that of a comparison frequency of 1 kHz. The output pin 10 of the phase comparator generates the following three output signals at the phase of signal 2:

· Advanced phase ..... "High"
· Delayed phase ..... "Low"
· Lock (synchronous) ..... High impedance

– Unlock Signal –

The lock detection output of pin 11 of PLL IC Q503 goes "high" when PLL is locked. It goes "low" when PLL is unlocked.

– Low Pass Filter –

The phase detection output of pin 10 is converted to DC current (shift voltage) by the PLL loop filter Q505 and Q506. The shift voltage is applied to the variable capacitor diode Q502 and then pin 8 of Q501 and controls the frequency of the internal VCO of Q501.

– VCO –

The VCO generates a frequency of 35.3±0.005 MHz that is 10.7 MHz lower than the first IF frequency.

2) Analyzer Circuit

The reference frequency goes to 10 kHz when the channel step is 10 or 20 kHz and 12.5 kHz when the channel step is 12.5 or 25 kHz.
When a bandscope display level of 1 MHz is selected, the VCO frequency is 35.3±0.5 MHz. In this case, the main microprocessor activates the analyzer circuit PLL circuit for scanning the frequency of the microprocessor clock at a channel step of 10 or 12.5 kHz in reference to 35.3 MHz.

Matthias Bopp www.dd1us.de

4.9 Controll

The functions of the I/O port are summarized in the table given below.

4.9.1 Main Microprocessor Q101

Table 4-5

Pin No.	I/O	Symbol	Description
1~9	O	SEGMENT 8~0	LCD segment terminal
10~13	O	COMMON 3~0	LCD common terminal
14~16	I	VL1~VL3	Vcc is divided by R109~R112. LCD contrast that provides a reference voltage for the LCD bias is adjusted by R112.
17	–	Vcc	(+5±0.5)V DC
18	O	BUZZER	Rectangular output is rectified for waveform and adjusted for level.
19	O	PLL ENABLE	With this pin, "high" indicates that data transmission to the PLL for the first/second local circuits is completed.
20	O	PLL CLOCK	Synchronous clock for PLL for the first/second local circuits.
21	O	PLL DATA	Data to be sent to PLL for the first/second local circuits.
22	O	$\overline{\text{MUTE}}$	When this pin goes "low", it acts as a test terminal (unused).
23	O	PLL SELECT	When this pin goes "low", PLL serves for the first local circuit. When this pin goes "high", PLL serves for the second local circuit.
24	I	$\overline{\text{ROT CH SELE CLK}}$	This pin is inputted when the "low" rotary channel selector is rotated.
25	O	128/$\overline{64}$	"Low/high" reception frequency is output to the PLL for the first local circuit.
26	O	$\overline{\text{RESET}}$	When this pin goes "low", the detected low voltage is output and all ICs are reset.
27	I	$\overline{\text{POWER LOW}}$	When Vcc falls to +4.5 V in the voltage detector circuit (Q305–Q307), this pin goes "low".
28	–	Vss	Ground
29	I	$\overline{\text{RESET}}$	Resets Q101 while the delay circuit C102, Q116, and R106 keeps the microprocessor "low" for more than 10 msec after turning on the power switch.
30	I	X IN	Clock input terminal (frequency: 4.0 MHz)
31	O	X OUT	Clock output terminal (frequency: 4.0 MHz)
32	–	Vss	Ground.
33~40	I/O	MAIN DATA 7~0	NOTE 1
41	O	READ/$\overline{\text{WRITE}}$	When this pin goes "low", data is written to Q102 or Q103. When this pin goes "high", data is read from Q102 or Q103.
42	O	PIO E	Synchronous signal for writing data to Q102 or reading data from Q102.
43	O	$\overline{\text{RAM CS}}$	When this pin is "low", data is read from RAM Q103.
44	O	$\overline{\text{PIO CS}}$	When this pin is "low", data is read from PIO Q102.
45	O	$\overline{\text{KEY READ}}$	When this pin is "low", a signal from the keyboard is read.
46~53	O	ADDRESS 10~3	Addressing signal for writing data to Q103 or reading data from Q103.
54~56	O	ADDRESS 2~0	Output data for key scan to Q201 (NOTE 2).
57	I	$\overline{\text{CONV. SENSI.}}$	Present when converter is "Lo", not present when converter is "Hi".
58	I	$\overline{\text{ALL RESET}}$	When the ALL RESET key is pressed, this pin goes "low". When the key is not pressed, this pin goes "high".
59	I	$\overline{\text{ACK}}$	When a command from Q301 and Q101 is read, this pin goes "low".
60	I	CW/$\overline{\text{CCW}}$	When the rotary channel selector is rotated counterclockwise, this pin goes "low". When the selector is rotated clockwise, this pin goes "high".
61	I	$\overline{\text{SECOND PLL UNLOCK}}$	When PLL for the second local circuit is unlocked, this pin goes "low". When the PLL is locked, this pin goes "high".
62	I	$\overline{\text{FIRST PLL UNLOCK}}$	When PLL for the second local circuit is unlocked, this pin goes "low". When the PLL is locked, this pin goes "high".
63	I	AF SCAN	When no voice signal is not being received, this pin goes "low". When a voice signal is being received, this pin goes "high".
64	I	$\overline{\text{SQUELCH}}$	When the squelch circuit is activated, this pin goes "low". When the squelch circuit is inactive, this pin goes "high".
65~72	O	SEGMENT 23~16	For column drivers.
73	–	Vss	Ground.
74	–	SEGMENT 15	Unused.
75~80	O	SEGMENT 14~9	For column drivers.

Matthias Bopp www.dd1us.de

4.9.2 Submicroprocessor Q301

Table 4-6

Pin No.	I/O	Symbol	Description
1	O	Vss	Ground.
2	O	X OUT	Clock output terminal (frequency: 4.0 MHz)
3	I	X IN	Clock input terminal (frequency: 4.0 MHz)
4, 5	I	MP 0, MP 1	When connected to VCC and Q301 is set to the single chip mode, these pins go "high".
6	I	$\overline{\text{RESET}}$	Resets Q301 while the delay circuit C102, Q116, and R106 keeps the microprocessor "low" for more than 10 msec after the power switch is turned on.
7	I	STANDBY	Unused. Connected to Vcc to keep the high status.
8	I	$\overline{\text{NMI}}$	Unused. Connected to Vcc to keep the high status.
9	O	$\overline{\text{ACK}}$	When Q101 completes reading command from Q301, this pin goes "low".
10	O	P21	Unconnected.
11	O	ANALYZER PLL CLK	Synchronous clock for analyzer PLL (Q304 reverses the high and low states of the clock; pin 4 of J303 outputs clock.)
12	O	ANA. PLL RESET	When data transmission to the analyzer PLL is completed, this pin goes "high" (Q304 reverses the high and low states of the clock; pin 5 of J303 outputs clock).
13	O	ANALYZER PLL SI	Outputs data to the analyzer PLL (reversed at Q304; pin 5 of J303 outputs clock).
14	I	P25	Unused. Connected to Vcc through R313 to keep the high state.
15	O	A/D CLK	Clock for activating Q302 (clock frequency, about 125 kHz). Outputs when Q301 reads data from Q302.
16		P27	Unused. Left open.
17	I	$\overline{\text{OBF}}$	When Q101 sends a command to Q301, this pin goes "low".
18	I	$\overline{\text{INTR}}$	When Q302 informs the completion of A/D conversion to Q101, this pin goes "low".
19, 20	I	P52, P53	Unused. Connected to Vcc to keep high status.
21		P54	Unused. Left open.
22	I	$\overline{\text{ANALYZER UNLOCK}}$	When the analyzer PLL is unlocked, this pin goes "low". When the analyzer PLL is locked, this pin goes "high".
23, 24		P56, P57	Unused. Left open.
25~32	I/O	P60~P67	NOTE 3
33		Vcc	(+5±0.5)V DC
34~38	O	SUB ADD. 15~11	NOTE 4
39~41		P42~P40	Unused. Left open.
42		Vss	Ground.
43~49		P17~P11	Unused. Left open.
50	O	D/I	When this pin goes "low", pins 51~58 of Q301 control the mode and frequency of Q108 and Q109. When this goes "high", pins 51~58 of Q301 read data displayed on the bandscope.
51~58	I/O	SUB DATA 7~0	NOTE 5
59, 60		P74, P73	Unused. Left open.
61	O	READ/$\overline{\text{WRITE}}$	When data is written to Q108 and Q109, this pin goes "low". When data is read from Q108 and Q109, this pin goes "high".
62	O	$\overline{\text{WR}}$	When voltage on pin 2 of Q301 is A/D converted, this pin goes "low".
63	O	$\overline{\text{RD}}$	When pins 51~58 of Q301 read data from Q302, this pin goes "low".
64	O	E	Synchronous clock for data exchange between Q301 and Q108 and Q109 (clock frequency: 1.0 MHz). Writes data to Q108 and Q109 at the emergency of a signal and reads data from Q108 and Q109 while this pin is "high".

Matthias Bopp www.dd1us.de

NOTE 1

1) **Data Exchange Between Pins 33–40 of Q101 and Q102**
These pins control the dimmer circuit Q112, R104, V101, and V102, mode data, FM-W, FM-N, and AM, and band data, B1–3 and BU, and send commands to Q301.

- **Writing Conditions**
Data on pins 33–40 of Q101 is output to Q102. Writing the data to Q102 is instructed with pin 41 of Q101 "low", and pin 44 of Q101 goes "low" before writing to Q102.
- **Reading Conditions**
Reading data from Q102 is instructed with pin 41 of Q101 "high", and pin 44 of Q101 goes "low" before pins 33–40 of Q101 read data from Q102.

2) **Data Exchange Between Pins 33–40 of Q101 and Q103**
Q103 keeps information stored in the receiver in concert with the backup circuit B101, C101, Q115, and R105.
- **Writing Conditions**
Pins 46–56 of Q101 provide the address for writing output data from pins 33–40 of Q101 to Q103; and writing the data to Q103 is instructed with pin 41 of Q101 "low". Pin 43 of Q101 goes "low" before writing the data to Q103.
- **Reading Conditions**
Pins 46–56 of Q101 provide the address for reading, and data is read from Q103 with pin 41 of Q101 "high". Pin 43 of Q101 goes "low" before pins 33–40 of Q101 read the data from Q103.

3) **Reading Data from the Keyboard**
- **Reading Conditions**
Pins 12–15 of Q201 output a key scan signal addressed by pins 54–56 of Q101. Pin 45 of Q101 goes "low" before pins 33–40 of Q101 read the key scanned.

NOTE 2

These pins provide the address for when Q101 writes data to Q103 or reads data from Q103. These pins also send data for key scanning from Q101 to Q102.

Table 4-7

Address			*Key scan	Key symbol
02	01	00		
L	L	L	KS0	MODE, DIMM, 1, 4, 7
L	L	H	KS1	Step, MC, 2, 5, 8, 0
L	H	L	KS2	Wid, MR, 3, 6, 9, ENT/MW, DOWN
L	H	H	KS3	CCL, AJ/MS.M, BS/M.SFT, P.SER, M.SCN, M.CL/BUZZ, UP
H	L	L	–	DIODE FLAG: Q206 to Q213

NOTE 3

Q301 judges that Q101 sent a command when pin 17 goes "low" and pins 25–32 of Q301 read the command. When reading is completed, pin 9 of Q301 goes "low" to indicate to Q101 that its command has been read.

NOTE 4

These pins send address data to determine which one of Q302, Q108, and Q109 should be accessed.

Table 4-8

Sub address					Access
15	14	13	12	11	
L	L	L	H	L	Q302
L	L	H	L	L	Q108
L	H	L	L	L	Q109

NOTE 5

These pins have the following functions: 1) reading digital data converted by Q302; 2) wirting control data to Q108 and Q109; 3) writing and reading display data. They synchronize with the clock of pin 64 of Q301 when they exchange data with Q108 and Q109.

- **Conditions for Reading Digital Data from Q302**
Pins 34–38 send address data to Q303 to access Q302. Pin 63 of Q301 goes "low" before pins 51–58 of Q301 read digital data.
- **Conditions for Reading Data from Q108 and Q109**
Pins 34–38 of Q301 goes send address data to Q303 to access Q108 and Q109. Pin 61 of Q301 goes "high" before pins 51–58 of Q301 read data.
- **Conditions for Writing Data to Q108 and Q109**
Pins 34–38 of Q301 send address data to Q303 to access Q108 and Q109. Pin 61 of Q301 goes "low" before pins 51–58 of Q301 write data.

Matthias Bopp www.dd1us.de

5. BLOCK DIAGRAM

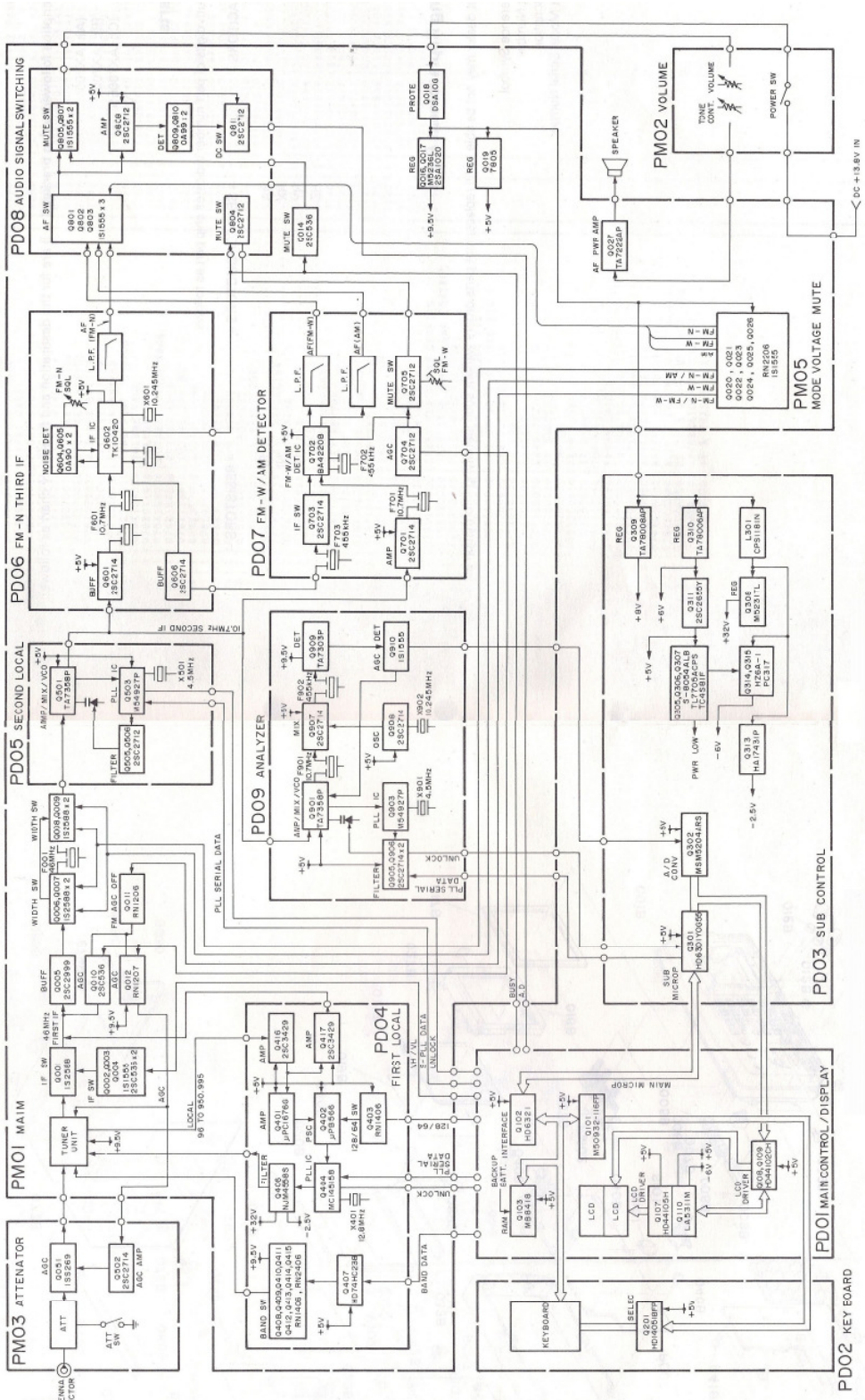

5. BLOCK DIAGRAM

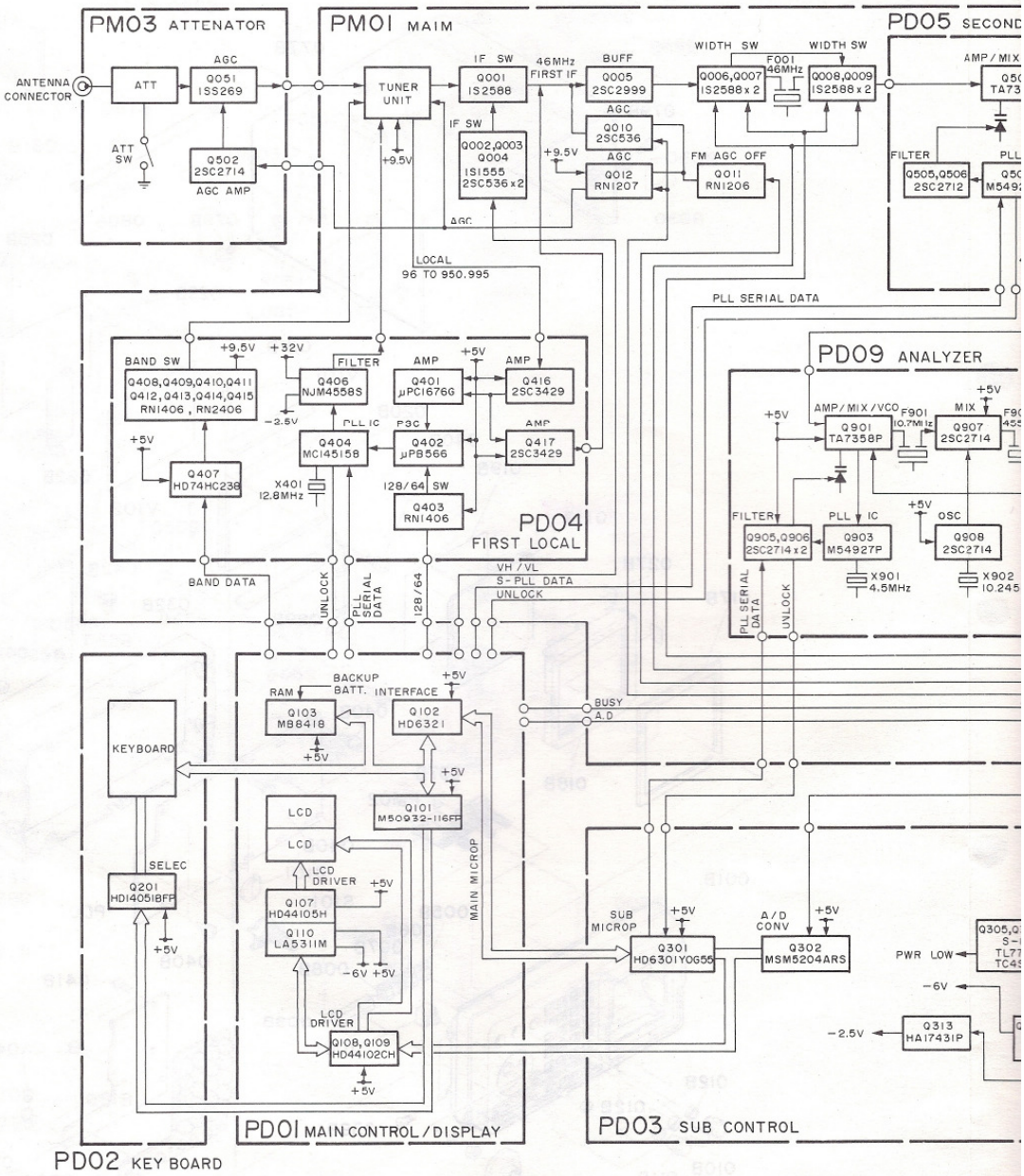

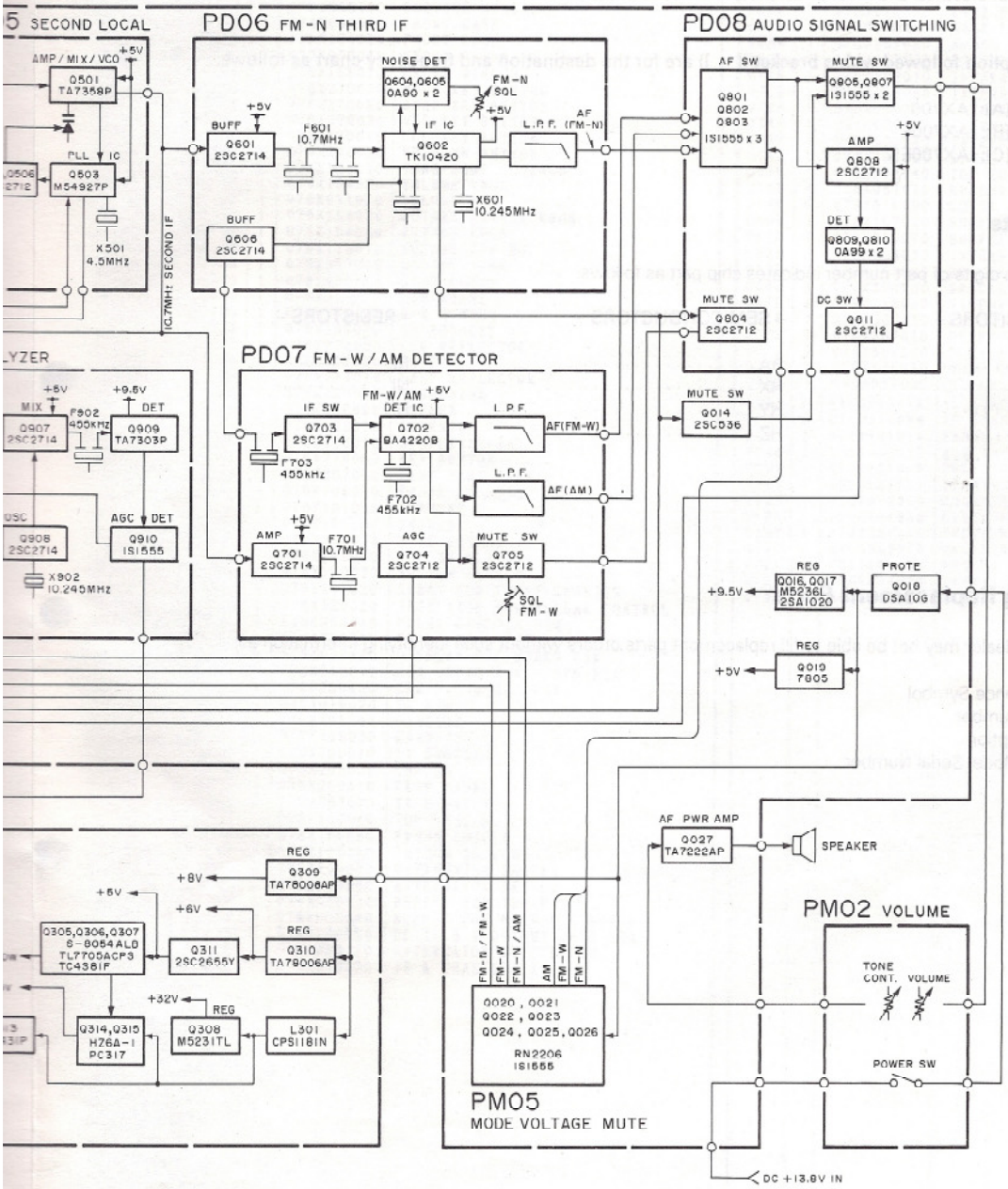
5 SECOND LOCAL
AMP/MIX/VCO
Q501 TA7358P
PLL IC
Q503 M54927P
X501 4.5MHz
10.7MHz SECOND IF
PD06 FM-N THIRD IF
BUFF
Q601 2SC2714
F601 10.7MHz
NOISE DET
Q604,Q605 0A90 x 2
FM-N SQL
IF IC
Q602 TK10420
L.P.F. (FM-N)
AF
X601 10.245MHz
BUFF
Q606 2SC2714
PD08 AUDIO SIGNAL SWITCHING
AF SW
Q801 Q802 Q803 1S1555 x 3
MUTE SW
Q805,Q807 1S1555 x 2
AMP
Q808 2SC2712
DET
Q809,Q810 0A99 x 2
MUTE SW
Q804 2SC2712
DC SW
Q811 2SC2712
MUTE SW
Q814 2SC536
PD07 FM-W/AM DETECTOR
IF SW
Q703 2SC2714
FM-W/AM DET IC
Q702 BA4220B
L.P.F.
AF(FM-W)
F703 455kHz
F702 455kHz
L.P.F.
AF(AM)
AMP
Q701 2SC2714
F701 10.7MHz
AGC
Q704 2SC2712
MUTE SW
Q705 2SC2712
SQL FM-W
MIX
Q907 2SC2714
F902 455kHz
DET
Q909 TA7303P
OSC
Q908 2SC2714
X902 10.245MHz
AGC DET
Q910 1S1555
REG
Q016,Q017 M5236L 2SA1020
PROTE
Q018 DSA106
+9.5V
REG
Q019 7805
+5V
AF PWR AMP
Q027 TA7222AP
SPEAKER
REG
Q309 TA78006AP
+8V
+5V
+6V
Q305,Q306,Q307 S-8054ALB TL7705ACP3 TC4361F
Q311 2SC2655Y
REG
Q310 TA79006AP
+32V
REG
Q314,Q315 HZ6A-1 PC317
Q308 M5231TL
L301 CPS118IN
FM-N / FM-W
FM-W
FM-N / AM
AM
FM-W
FM-N
Q020, Q021
Q022, Q023
Q024, Q025, Q026
RN2206
1S1555
PM05
MODE VOLTAGE MUTE
PM02 VOLUME
TONE CONT.
VOLUME
POWER SW
DC +13.8V IN

6. EXPLODED PARTS VIEW AND PARTS LIST

6.1 General

Information on most electrical and mechanical parts is included in the parts list. The parts are listed by reference symbols in alphanumeric order.

NOTE: 1) Description followed with a bracket ([ ]) are for the destination and frequency chart as follows:

[A]: AX700
[B]: AX700E
[C]: AX700ES

6.2 Chip Parts

First through fouth digits of part number indicates chip part as follows:

– CAPACITORS –	– SEMICONDUCTORS –	– RESISTORS –
DD4	BA	RI
DD5	HX	NI
DD9	HY	NN
DK4	HZ	
DK5		
DK9		
DF9		
EY		

6.3 Ordering Replacement Parts

Please note that dealer may not be able to fill replacement parts orders without such identifying information as:

- Reference Symbol
- Part Number
- Description
- Unit Model Serial Number

Matthias Bopp www.dd1us.de

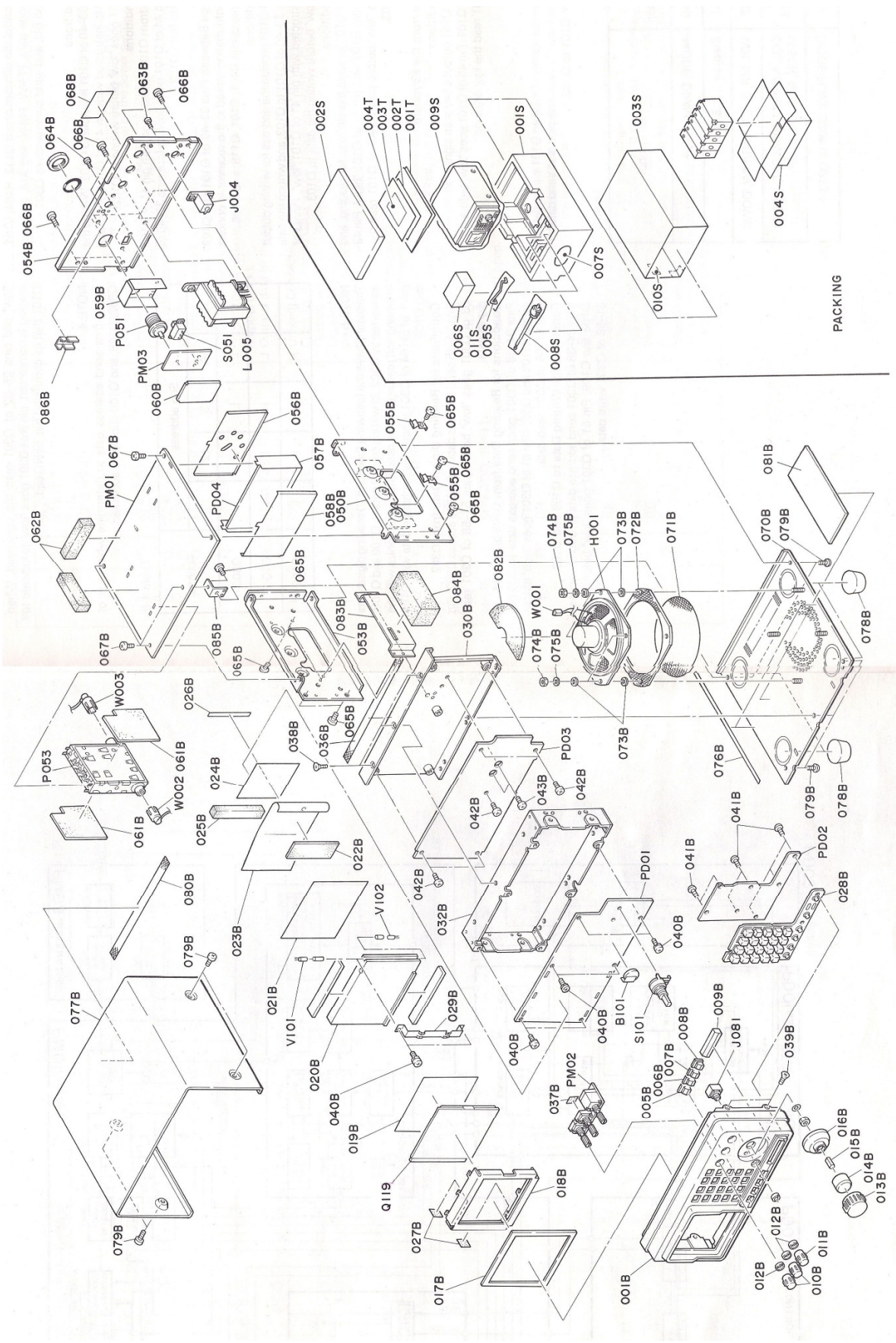
PACKING
002S
004T
003T
002T
001T
009S
001S
003S
004S
007S
010S
006S
011S
005S
008S
068B
063B
066B
064B
066B
054B 066B
J004
059B
P051
PM03
S051
L005
086B
060B
056B
067B
PM01
PD04
057B
058B
050B
055B
065B
062B
085B
083B
053B
084B
030B
082B
W001
074B
075B
H001
073B
072B
071B
070B
079B
081B
078B
W003
026B
P053
W002 061B
061B
024B
025B
038B
036B
PD03
042B
043B
073B
076B
041B
PD02
028B
PD01
040B
022B
032B
080B
023B
V102
V101
021B
029B
020B
B101
S101
009B
008B
007B
006B
005B
J081
039B
077B
079B
PM02
037B
019B
Q119
018B
027B
017B
001B
016B
015B
014B
013B
012B
011B
010B

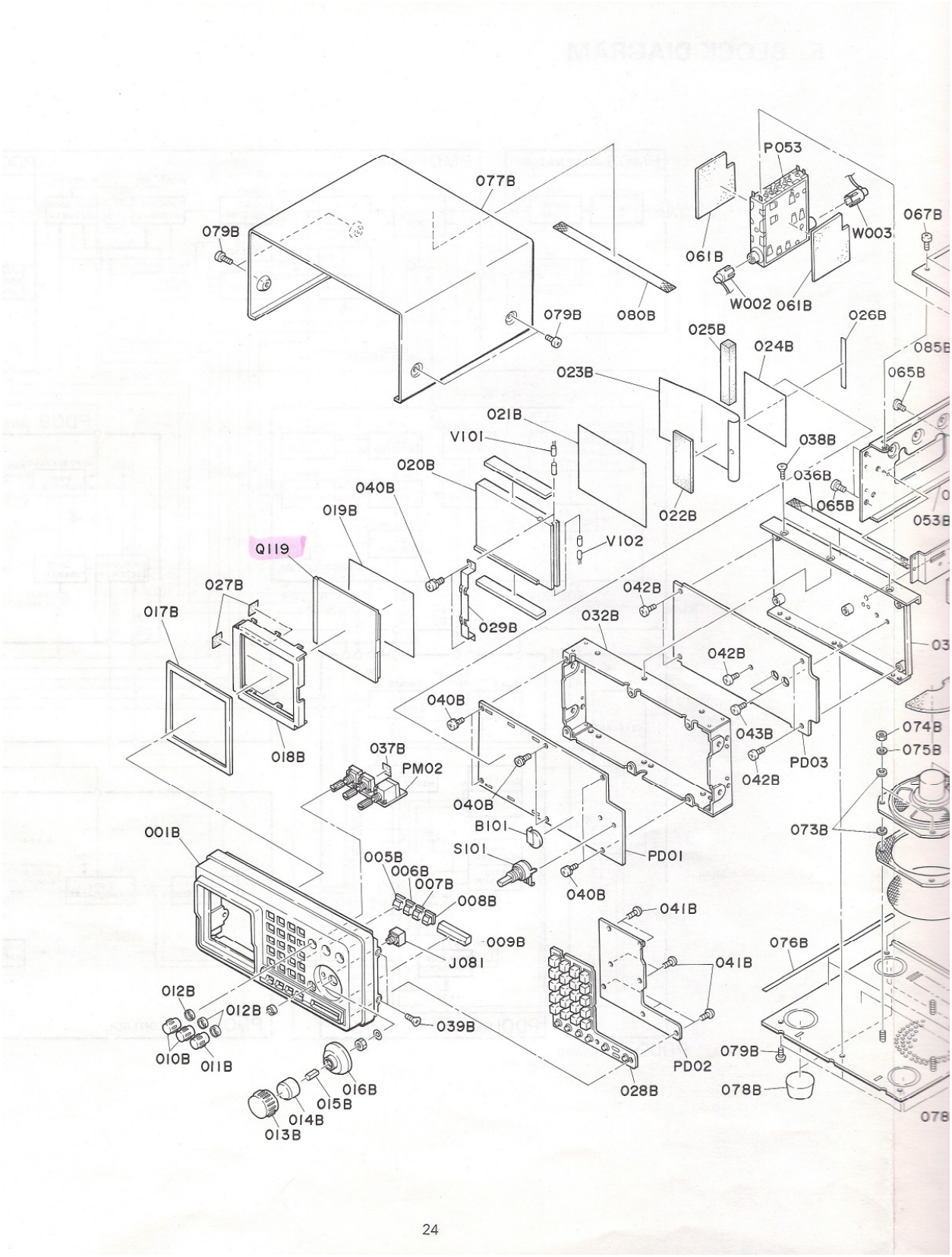
P053
077B
067B
079B
W003
061B
W002
061B
079B
080B
026B
025B
024B
085B
023B
065B
021B
V101
038B
020B
036B
040B
065B
019B
022B
053B
Q119
V102
027B
042B
017B
029B
032B
042B
040B
043B
074B
075B
018B
037B
PD03
PM02
042B
040B
B101
073B
001B
S101
PD01
005B
006B
007B
040B
008B
041B
009B
076B
J081
041B
012B
012B
039B
010B
011B
079B
PD02
016B
015B
028B
078B
014B
013B
078

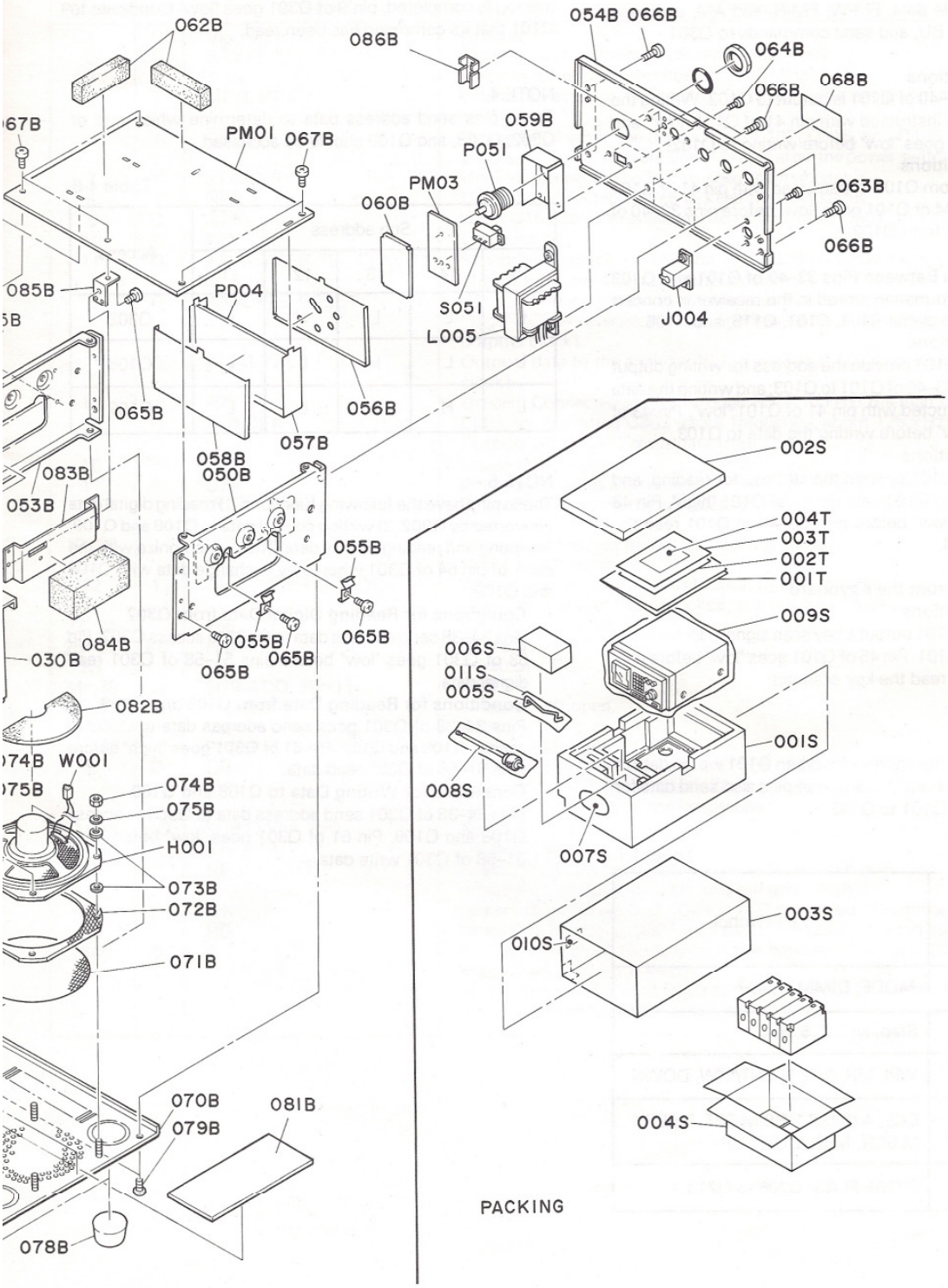
062B
086B
054B 066B
064B
066B
068B
067B
PM01
067B
059B
P051
PM03
063B
060B
066B
085B
PD04
S051
J004
L005
065B
056B
057B
058B
050B
083B
053B
055B
065B
084B
055B
065B
030B
065B
082B
074B W001
075B
074B
075B
H001
073B
072B
071B
070B
081B
079B
078B
002S
004T
003T
002T
001T
009S
006S
011S
005S
001S
008S
007S
003S
010S
004S
PACKING

REF. DESIG.	QTY	PART NO.	DESCRIPTION
0001	1	076X855110	SERVICE MANUAL [A]
001B	1	076X064500	FRONT CASE
002B	1	076X064010	FRONT CASE
003B	1	076X053010	FRONT COVER
004B	1	076X158010	FRONT WINDOW
005B	1	076X270010	MODE KEY BUTTON
006B	1	076X270020	STEP KEY BUTTON
007B	1	076X270030	WID KEY BUTTON
008B	1	076X270040	CCL KEY BUTTON
009B	1	076X270050	UP/DOWN BUTTON
010B	2	076X154010	TONE/SQUELCH KNOB
011B	1	076X154020	VOLUME KNOB
012B	3	076X011010	VOLUME NUT
013B	1	076X154030	ROTARY RUBBER KNOB
014B	1	076X154040	ROTARY KNOB
015B	1	076X115010	ROTARY SPRING
016B	1	076X353010	ROTARY RING
017B	1	076X056010	DUST COVER
018B	1	076X053020	LCD FRAME
019B	1	076X158020	M/W WINDOW
020B	1	076X151010	INTRODUCER
021B	1	076X274020	LCD REFLECTOR
022B	1	076X107010	SHEET
023B	1	076X274010	LAMP REFLECTOR
024B	1	076X120010	INSULATOR
025B	1	076X056020	BUFFER
026B	1	076X122010	ADHESIVE
027B	2	076X118010	SPACER(ZEBRA)
028B	1	076X270060	KEY BUTTON
029B	1	076X267010	LAMP HEAT SINK
030B	1	076X105010	FRONT CHASSIS
031B	5	076X101010	SUPPORT
032B	1	076X109500	SHIELD
033B	2	076X109010	SIDE SHIELD
034B	1	076X109020	TOP SHIELD
035B	1	076X109030	BOTTOM SHIELD
036B	1	076X107020	SHEET FOR FRONT CHASISS
037B	1	076X120020	INSULATOR FOR VOLUME CONTROL
038B	6	51042604A0	FRONT CHASSIS FIX
039B	4	51040305A9	FRONT CASE FIX
040B	6	51440204A0	DISPLAY P.C.BOARD FIX
041B	7	076X010010	KEY BOARD P.C.BOARD FIX
042B	5	51062604A0	CPU P.C.BOARD FIX
043B	2	076X010020	TR FIX
050B	1	076X105500	CHASSIS
051B	1	076X105020	CHASSIS
052B	1	076X160010	TR BRACKET
053B	1	076X105030	CHASSIS
054B	1	076X250010	REAR PANEL
055B	2	076X267020	TR CLAMPER
056B	1	076X109040	TOP SHIELD
057B	1	076X109050	FRAME SHIELD
058B	1	076X109060	BOTTOM SHIELD
059B	1	076X109070	ATTENUATOR SHIELD
060B	1	076X109080	ATTENUATOR SHIELD
061B	2	076X056030	BUFFER FOR TUNER
062B	2	076X056040	BUFFER FOR MAIN P.C.BOARD
063B	2	51062606E0	DC 13.8 V OUTPUT JACK FIX
064B	2	51060203E0	ATTENUATOR SWITCH FIX
065B	7	076X010020	TR & CHASIS FIX

REF. DESIG.	QTY	PART NO.	DESCRIPTION
066B	7	076X010060	REAR PANEL FIX
067B	5	51100304E9	MAIN P.C.BOARD FIX
068B	1	076X861020	MODEL NAME LABEL
070B	1	076X053030	BOTTOM COVER
071B	1	076X202010	INTERNAL SPEAKER NET
072B	1	076X056050	INTERNAL SPEAKER BUFFER
073B	8	076X056060	INTERNAL SPEAKER FIX
074B	4	53110301A9	INTERNAL SPEAKER FIX
075B	4	54010300A0	INTERNAL SPEAKER FIX
076B	2	076X107030	SHEET FOR BOTTOM COVER
077B	1	076X053040	TOP COVER
078B	4	076X057010	RUBBER LEG
079B	9	076X010050	COVER FIX
080B	1	076X107020	BUFFER FOR TOP COVER
081B	1	076X056070	BUFFER FOR BOTTOM COVER
082B	1	076X056080	INTERNAL SPEAKER BUFFER
083B	1	076X160040	BRACKET
086B	1	076X160030	BRACKET
087B	1	076X118020	WINDOW SPACER
001S	1	076X809010	CUSHION
002S	1	076X807010	REINFORCE
003S	1	076X804010	SLEEVE CASE
004S	5	076X805010	MASS CARTON
005S	1	076X057020	STAND
006S	1	AA1001301R	AC ADAPTOR [A]
006S	1	AA2201202R	AC ADAPTOR [B/C]
007S	2	076X861010	LABEL
008S	1	YR0606003R	ROD ANTENNA
009S	1	076X811010	POLYETHY BAG FOR SET
010S	1	9523019010	SERIAL NO. CARD
011S	1	076X811020	POLYETHY BAG FOR STAND
012S	1	228C861030	LABEL FOR SLEEVE
001T	1	076X851010	ONERS MANUAL [B/C]
001T	1	076X851110	ONERS MANUAL [A]
002T	1	9611000042	USER'S CARD [A]
003T	1	006C854010	WARRANTY [A]
004T	1	9650000136	S.STATION CARD [A]

Matthias Bopp www.dd1us.de

REF. DESIG.	QTY	PART NO.	DESCRIPTION
B101	1	ZB0902001R	LITHIUM BATERRY
C001	1	DS17223010	0.022 UF +-20%
C002	1	DD15330370	33 PF SL +-5%
C003	1	DS17223010	0.022 UF +-20%
C004	1	DS17223010	0.022 UF +-20%
C005	1	DS17102010	0.001 UF +-20%
C006	1	DS17102010	0.001 UF +-20%
C007	1	DD15560370	56 PF SL +-5%
C008	1	DD15560370	56 PF SL +-5%
C009	1	DS17102010	0.001 UF +-20%
C010	1	DS17223010	0.022 UF +-20%
C011	1	DS17223010	0.022 UF +-20%
C012	1	DS17102010	0.001 UF +-20%
C013	1	DS17223010	0.022 UF +-20%
C014	1	DS17223010	0.022 UF +-20%
C015	1	EJ47601610	47 UF/16 V ELECT CAP
C017	1	DS17103010	0.01 UF +-20%
C018	1	EJ10601610	10 UF/16 V ELECT CAP
C019	1	DS17102010	0.001 UF +-20%
C020	1	DS17103010	0.01 UF +-20%
C021	1	EA33802510	3300 UF/25 V ELECT CAP
C022	1	DS17103010	0.01 UF +-20%
C023	1	EJ10601610	10 UF/16 V ELECT CAP
C024	1	EJ10601610	10 UF/16 V ELECT CAP
C025	1	DS17103010	0.01 UF +-20%
C026	1	EJ10601610	10 UF/16 V ELECT CAP
C027	1	DF15473310	0.047 UF +-5%
C028	1	EA10701610	100 UF/16 V ELECT CAP
C029	1	EJ47601610	47 UF/16 V ELECT CAP
C030	1	DS17223010	0.022 UF +-20%
C031	1	EJ10601610	10 UF/16 V ELECT CAP
C032	1	DF15224310	0.22 UF +-5%
C033	1	EJ47601610	47 UF/16 V ELECT CAP
C034	1	EA10701610	100 UF/16 V ELECT CAP
C035	1	EJ10505010	1 UF/50 V ELECT CAP
C036	1	EY10601610	10 UF/16 V TANTAL CAP
C037	1	EY10601610	10 UF/16 V TANTAL CAP
C038	1	DS17102010	0.001 UF +-20%
C039	1	DS17102010	0.001 UF +-20%
C040	1	EJ10505010	1 UF/50 V ELECT CAP
C041	1	EJ10601610	10 UF/16 V ELECT CAP
C042	1	EJ10601610	10 UF/16 V ELECT CAP
C043	1	EJ10601610	10 UF/16 V ELECT CAP
C044	1	EJ33601610	33 UF/16 V ELECT CAP
C051	1	DK56102300	0.001 UF +-10%
C052	1	DK56102300	0.001 UF +-10%
C053	1	DK56102300	0.001 UF +-10%
C054	1	DK56102300	0.001 UF +-10%
C101	1	KC076X001R	47 UF/10 V TANTAL CAP
C102	1	EY10501610	1 UF/16 V TANTAL CAP
C103	1	DK56103300	0.01 UF +-10%
C104	1	EY47402510	0.47 UF/25 V TANTAL CAP
C105	1	DK56103300	0.01 UF +-10%
C106	1	DK56103300	0.01 UF +-10%
C107	1	DK56103300	0.01 UF +-10%
C108	1	DD55750300	75 PF CH +-5%
C109	1	DD55330300	33 PF CH +-5%
C110	1	DK56103300	0.01 UF +-10%
C111	1	DK56103300	0.01 UF +-10%
C112	1	DK56103300	0.01 UF +-10%

REF. DESIG.	QTY	PART NO.	DESCRIPTION
C113	1	DK56103300	0.01 UF +-10%
C114	1	DK56103300	0.01 UF +-10%
C115	1	DK56103300	0.01 UF +-10%
C116	1	DK56103300	0.01 UF +-10%
C117	1	DD51100300	10 PF CH +-0.5 PF
C118	1	DK56103300	0.01 UF +-10%
C119	1	DD51100300	10 PF CH +-0.5 PF
C120	1	DD51100300	10 PF CH +-0.5 PF
C121	1	DD51100300	10 PF CH +-0.5 PF
C122	1	DD51100300	10 PF CH +-0.5 PF
C123	1	DD51100300	10 PF CH +-0.5 PF
C124	1	DK56103300	0.01 UF +-10%
C125	1	DK56103300	0.01 UF +-10%
C126	1	DD51100300	10 PF CH +-0.5 PF
C127	1	DK56103300	0.01 UF +-10%
C128	1	DD51100300	10 PF CH +-0.5 PF
C129	1	DD51100300	10 PF CH +-0.5 PF
C130	1	DD51100300	10 PF CH +-0.5 PF
C131	1	DD51100300	10 PF CH +-0.5 PF
C132	1	DD51100300	10 PF CH +-0.5 PF
C133	1	DK56103300	0.01 UF +-10%
C134	1	DK56103300	0.01 UF +-10%
C135	1	DK56103300	0.01 UF +-10%
C136	1	DK56103300	0.01 UF +-10%
C137	1	DK56103300	0.01 UF +-10%
C138	1	DK56102300	0.001 UF +-10%
C139	1	DD51100300	10 PF CH +-0.5 PF
C140	1	DD51100300	10 PF CH +-0.5 PF
C141	1	DK56102300	0.001 UF +-10%
C142	1	DK56102300	0.001 UF +-10%
C143	1	DK56102300	0.001 UF +-10%
C144	1	DK56102300	0.001 UF +-10%
C145	1	DK56102300	0.001 UF +-10%
C146	1	DK56102300	0.001 UF +-10%
C147	1	DK56102300	0.001 UF +-10%
C148	1	DK56102300	0.001 UF +-10%
C149	1	DD51100300	10 PF CH +-0.5 PF
C150	1	DD51100300	10 PF CH +-0.5 PF
C151	1	DD51100300	10 PF CH +-0.5 PF
C152	1	DD51100300	10 PF CH +-0.5 PF
C153	1	DD51100300	10 PF CH +-0.5 PF
C154	1	DD51100300	10 PF CH +-0.5 PF
C155	1	DD51100300	10 PF CH +-0.5 PF
C156	1	DD51100300	10 PF CH +-0.5 PF
C157	1	DD51100300	10 PF CH +-0.5 PF
C158	1	DD51100300	10 PF CH +-0.5 PF
C159	1	DK56102300	0.001 UF +-10%
C160	1	DD51100300	10 PF CH +-0.5 PF
C161	1	DK56102300	0.001 UF +-10%
C162	1	DK56102300	0.001 UF +-10%
C163	1	DK56102300	0.001 UF +-10%
C164	1	DK56102300	0.001 UF +-10%
C165	1	DD51100300	10 PF CH +-0.5 PF
C166	1	DK56561300	560 PF CH +-10%
C167	1	DD51100300	10 PF CH +-0.5 PF
C168	1	DD51100300	10 PF CH +-0.5 PF
C169	1	DD51100300	10 PF CH +-0.5 PF
C170	1	DD51100300	10 PF CH +-0.5 PF
C171	1	DD51100300	10 PF CH +-0.5 PF
C172	1	DD51100300	10 PF CH +-0.5 PF

Matthias Bopp www.dd1us.de

REF. DESIG.	QTY	PART NO.	DESCRIPTION
C173	1	DD51100300	10 PF CH +-0.5 PF
C174	1	DD51100300	10 PF CH +-0.5 PF
C175	1	DD51100300	10 PF CH +-0.5 PF
C176	1	DD51100300	10 PF CH +-0.5 PF
C177	1	DD51100300	10 PF CH +-0.5 PF
C178	1	DD51100300	10 PF CH +-0.5 PF
C179	1	DD51100300	10 PF CH +-0.5 PF
C201	1	DK56103300	0.01 UF +-10%
C301	1	EA33702510	330 UF/25 V ELECT CAP
C302	1	KC076X004R	220 UF/16 V TANTAL CAP
C303	1	EA33702510	330 UF/25 V ELECT CAP
C304	1	EJ10701010	100 UF/10 V ELECT CAP
C305	1	EA10605010	10 UF/50 V ELECT CAP
C306	1	EA10702510	100 UF/25 V ELECT CAP
C307	1	EA10702510	100 UF/25 V ELECT CAP
C308	1	EA22605010	22 UF/50 V ELECT CAP
C309	1	EA47601610	47 UF/16 V ELECT CAP
C310	1	EA10605010	10 UF/50 V ELECT CAP
C311	1	EA22605010	22 UF/50 V ELECT CAP
C312	1	EJ47405010	0.47 UF/50 V ELECT CAP
C313	1	EA47505010	4.7 UF/50 V ELECT CAP
C314	1	EA47505010	4.7 UF/50 V ELECT CAP
C315	1	EA47505010	4.7 UF/50 V ELECT CAP
C316	1	EY10403510	0.1 UF/35 V TANTAL CAP
C317	1	KC076X003R	0.1 UF +80%,-20%
C318	1	KC076X003R	0.1 UF +80%,-20%
C319	1	KC076X003R	0.1 UF +80%,-20%
C320	1	KC076X003R	0.1 UF +80%,-20%
C321	1	KC076X003R	0.1 UF +80%,-20%
C322	1	KC076X003R	0.1 UF +80%,-20%
C323	1	KC076X003R	0.1 UF +80%,-20%
C324	1	KC076X003R	0.1 UF +80%,-20%
C325	1	KC076X003R	0.1 UF +80%,-20%
C326	1	KC076X003R	0.1 UF +80%,-20%
C327	1	KC076X002R	0.001 UF
C328	1	KC076X003R	0.1 UF +80%,-20%
C329	1	KC076X003R	0.1 UF +80%,-20%
C330	1	KC076X003R	0.1 UF +80%,-20%
C331	1	DK56103300	0.01 UF +-10%
C332	1	DK56103300	0.01 UF +-10%
C333	1	DF15104310	0.1 UF +-5%
C334	1	DK56103300	0.01 UF +-10%
C335	1	DK56103300	0.01 UF +-10%
C336	1	DD55151300	150 PF CH +-5%
C337	1	DD55750300	75 PF CH +-5%
C338	1	DD55750300	75 PF CH +-5%
C339	1	DD55330300	33 PF CH +-5%
C340	1	DD55221300	220 PF CH +-5%
C341	1	DK58104200	0.1 UF +80,-20%
C342	1	DK56103300	0.01 UF +-10%
C343	1	DD55330300	33 PF CH +-5%
C344	1	DD55330300	33 PF CH +-5%
C345	1	DD55330300	33 PF CH +-5%
C346	1	DD55330300	33 PF CH +-5%
C347	1	DD55330300	33 PF CH +-5%
C348	1	DK56103300	0.01 UF +-10%
C349	1	DD55330300	33 PF CH +-5%
C350	1	DD55330300	33 PF CH +-5%
C351	1	DK56103300	0.01 UF +-10%
C352	1	DD55330300	33 PF CH +-5%

REF. DESIG.	QTY	PART NO.	DESCRIPTION
C353	1	DD55750300	75 PF CH +-5%
C354	1	DD55750300	75 PF CH +-5%
C355	1	DD55750300	75 PF CH +-5%
C356	1	DD55750300	75 PF CH +-5%
C357	1	DD55750300	75 PF CH +-5%
C358	1	DD55750300	75 PF CH +-5%
C359	1	DD55750300	75 PF CH +-5%
C360	1	DD55560300	56 PF CH +-5%
C361	1	DD55560300	56 PF CH +-5%
C362	1	DD55560300	56 PF CH +-5%
C363	1	DD55560300	56 PF CH +-5%
C364	1	DD55560300	56 PF CH +-5%
C365	1	DD55560300	56 PF CH +-5%
C366	1	DD55560300	56 PF CH +-5%
C367	1	DD55560300	56 PF CH +-5%
C368	1	DD55750300	75 PF CH +-5%
C369	1	DD55750300	75 PF CH +-5%
C370	1	DD55330300	33 PF CH +-5%
C371	1	DD55330300	33 PF CH +-5%
C372	1	DD55330300	33 PF CH +-5%
C373	1	DD55330300	33 PF CH +-5%
C374	1	DD55330300	33 PF CH +-5%
C375	1	DD55330300	33 PF CH +-5%
C376	1	DD55330300	33 PF CH +-5%
C377	1	DD55330300	33 PF CH +-5%
C378	1	DD55330300	33 PF CH +-5%
C379	1	DD55330300	33 PF CH +-5%
C380	1	DK56102300	0.001 UF +-10%
C381	1	DK56102300	0.001 UF +-10%
C401	1	DK56102300	0.001 UF +-10%
C402	1	DK56102300	0.001 UF +-10%
C403	1	DK56223300	0.022 UF +-10%
C404	1	DK56102300	0.001 UF +-10%
C405	1	DK56102300	0.001 UF +-10%
C406	1	DK56102300	0.001 UF +-10%
C407	1	DK56103300	0.01 UF +-10%
C408	1	DK56223300	0.022 UF +-10%
C409	1	DD55330300	33 PF CH +-5%
C410	1	DD55220300	22 PF CH +-5%
C411	1	CT1100024R	10 PF TRIMMING CAP
C413	1	EA47600610	47 UF/6.3 V ELECT CAP
C414	1	DK56103300	0.01 UF +-10%
C415	1	DK56102300	0.001 UF +-10%
C416	1	DF16474520	0.47 UF +-10%
C417	1	DF16474520	0.47 UF +-10%
C418	1	EJ10601610	10 UF/16 V ELECT CAP
C419	1	EJ10603510	10 UF/35 V ELECT CAP
C421	1	DK56223300	0.022 UF +-10%
C422	1	EJ10601610	10 UF/16 V ELECT CAP
C423	1	DK56102300	0.001 UF +-10%
C424	1	DK56102300	0.001 UF +-10%
C425	1	DD50020300	2 PF CK +-0.25 PF
C426	1	DK56102300	0.001 UF +-10%
C427	1	DK56102300	0.001 UF +-10%
C428	1	EJ33601610	33 UF/16 V ELECT CAP
C501	1	DK56102300	0.001 UF +-10%
C502	1	DK56102300	0.001 UF +-10%
C503	1	DD50020370	2 PF SL +-0.25 PF
C504	1	DD50030370	3 PF SL +-0.25 PF
C505	1	DK56103300	0.01 UF +-10%

Matthias Bopp www.dd1us.de

REF. DESIG.	Q'TY	PART NO.	DESCRIPTION
C506	1	DK56103300	0.01 UF +-10%
C507	1	EJ47600610	47 UF/6.3 V ELECT CAP
C508	1	DD51080330	8 PF RH +-0.5 PF
C509	1	CT1200021R	20 PF TRIMMING CAP
C510	1	DD55680370	68 PF SL +-5%
C511	1	DK56330300	33 PF CH +-10%
C512	1	DK56103300	0.01 UF +-10%
C513	1	DK56103300	0.01 UF +-10%
C514	1	DK56103300	0.01 UF +-10%
C515	1	DK56103300	0.01 UF +-10%
C516	1	DK56103300	0.01 UF +-10%
C517	1	DK56103300	0.01 UF +-10%
C518	1	DK56103300	0.01 UF +-10%
C519	1	EJ47600610	47 UF/6.3 V ELECT CAP
C520	1	DK56103300	0.01 UF +-10%
C521	1	DD55220320	22 PF PH +-5%
C522	1	CT1200021R	20 PF TRIMMING CAP
C523	1	EJ10601610	10 UF/16 V ELECT CAP
C524	1	EV22503560	2.2 UF/35 V TANTAL CAP
C525	1	EV10403560	0.1 UF/35 V TANTAL CAP
C526	1	EJ47600610	47 UF/6.3 V ELECT CAP
C527	1	DK56103300	0.01 UF +-10%
C528	1	EV10502560	1 UF/25 V TANTAL CAP
C601	1	DK56103300	0.01 UF +-10%
C602	1	DK56223300	0.022 UF +-10%
C603	1	DD50020370	2 PF SL +-0.25 PF
C604	1	DK56103300	0.01 UF +-10%
C605	1	DK56103300	0.01 UF +-10%
C606	1	DD55270370	27 PF SL +-5%
C607	1	DD55270370	27 PF SL +-5%
C608	1	EV10503560	1 UF/35 V TANTAL CAP
C609	1	EV10503560	1 UF/35 V TANTAL CAP
C610	1	DK58473300	0.047 UF +80,-20%
C611	1	DD55221370	220 PF SL +-5%
C612	1	DK56102300	0.001 UF +-10%
C613	1	DK58104200	0.1 UF +80,-20%
C614	1	EV10403560	0.1 UF/35 V TANTAL CAP
C615	1	DK58473300	0.047 UF +80,-20%
C616	1	DK56223300	0.022 UF +-10%
C617	1	DK58473300	0.047 UF +80,-20%
C618	1	EJ10601610	10 UF/16 V ELECT CAP
C619	1	DD55820370	82 PF SL +-5%
C621	1	DK56103300	0.01 UF +-10%
C622	1	DK56223300	0.022 UF +-10%
C623	1	DK56103300	0.01 UF +-10%
C624	1	DK56223300	0.022 UF +-10%
C625	1	EV47601060	47 UF/16 V TANTAL CAP
C701	1	DK56103300	0.01 UF +-10%
C702	1	DK56223300	0.022 UF +-10%
C703	1	DK56223300	0.022 UF +-10%
C704	1	DK56223300	0.022 UF +-10%
C705	1	DK56223300	0.022 UF +-10%
C706	1	DK56223300	0.022 UF +-10%
C707	1	EJ47600610	47 UF/6.3 V ELECT CAP
C709	1	DK56103300	0.01 UF +-10%
C710	1	DK56103300	0.01 UF +-10%
C711	1	EJ33601610	33 UF/16 V ELECT CAP
C712	1	DD55121370	120 PF SL +-5%
C713	1	DK56223300	0.022 UF +-10%
C714	1	EJ47600610	47 UF/6.3 V ELECT CAP

REF. DESIG.	Q'TY	PART NO.	DESCRIPTION
C715	1	DK56223300	0.022 UF +-10%
C716	1	DK56103300	0.01 UF +-10%
C717	1	EJ10505010	1 UF/50 V ELECT CAP
C718	1	DK56103300	0.01 UF +-10%
C719	1	EJ10505010	1 UF/50 V ELECT CAP
C720	1	DK58104200	0.1 UF +80,-20%
C721	1	EV10403560	0.1 UF/35 V TANTAL CAP
C722	1	DD55120300	12 PF CH +-5%
C801	1	EJ10601610	10 UF/16 V ELECT CAP
C802	1	EJ10601610	10 UF/16 V ELECT CAP
C803	1	EJ10601610	10 UF/16 V ELECT CAP
C804	1	DK56103300	0.01 UF +-10%
C805	1	DK56103300	0.01 UF +-10%
C806	1	EJ10505010	1 UF/50 V ELECT CAP
C807	1	EJ10601610	10 UF/16 V ELECT CAP
C808	1	EJ10505010	1 UF/50 V ELECT CAP
C809	1	EJ10601610	10 UF/16 V ELECT CAP
C810	1	EV10403560	0.1 UF/35 V TANTAL CAP
C811	1	EJ10505010	1 UF/50 V ELECT CAP
C812	1	EJ10601610	10 UF/16 V ELECT CAP
C813	1	EJ10505010	1 UF/50 V ELECT CAP
C814	1	EJ47600610	47 UF/6.3 V ELECT CAP
C901	1	DD55220330	22 PF RH +-5%
C902	1	DK56102300	0.001 UF +-10%
C903	1	DD50010370	1 PF SL +-0.25 PF
C904	1	DD50030370	3 PF SL +-0.25 PF
C905	1	DK56103300	0.01 UF +-10%
C907	1	EJ47600610	47 UF/6.3 V ELECT CAP
C908	1	DD55101300	100 PF CH +-5%
C909	1	CT1200021R	20 PF TRIMMING CAP
C910	1	DK56102300	0.001 UF +-10%
C911	1	DK56103300	0.01 UF +-10%
C912	1	DK56103300	0.01 UF +-10%
C913	1	DK56103300	0.01 UF +-10%
C914	1	DK56103300	0.01 UF +-10%
C915	1	DK56103300	0.01 UF +-10%
C916	1	DK56103300	0.01 UF +-10%
C917	1	DK56103300	0.01 UF +-10%
C918	1	EJ47600610	47 UF/6.3 V ELECT CAP
C919	1	DK56103300	0.01 UF +-10%
C920	1	DD55220360	22 PF UJ +-5%
C921	1	CT1200021R	20 PF TRIMMING CAP
C922	1	EJ10601610	10 UF/16 V ELECT CAP
C923	1	EV10503560	1 UF/35 V TANTAL CAP
C924	1	EV10403560	0.1 UF/35 V TANTAL CAP
C925	1	EJ47600610	47 UF/6.3 V ELECT CAP
C926	1	DK56103300	0.01 UF +-10%
C927	1	DD55161370	160 PF SL +-5%
C928	1	DK56102300	0.001 UF +-10%
C929	1	DK56103300	0.01 UF +-10%
C930	1	DD55270370	27 PF SL +-5%
C931	1	DD55270370	27 PF SL +-5%
C932	1	DD55470370	47 PF SL +-5%
C933	1	DK56103300	0.01 UF +-10%
C934	1	DK56223300	0.022 UF +-10%
C935	1	DK58104200	0.1 UF +80,-20%
C936	1	EJ10601610	10 UF/16 V ELECT CAP
C937	1	DK56103300	0.01 UF +-10%
C938	1	DK56103300	0.01 UF +-10%
C939	1	DK56103300	0.01 UF +-10%

Matthias Bopp www.dd1us.de

REF. DESIG.	Q'TY	PART NO.	DESCRIPTION
C940	1	EJ10601610	10 UF/16 V ELECT CAP
C941	1	DD55120370	12 PF SL +-5%
C942	1	DD55120330	12 PF RH +-5%
C943	1	DD55510330	51 PF RH +-5%
F001	1	XU246000M2	CRYSTAL FILTER 46.0 MHZ 46M20A
F301	1	FC9004002R	FERRITE CORE
F302	1	FC9004002R	FERRITE CORE
F303	1	FC9004002R	FERRITE CORE
F304	1	FC9004002R	FERRITE CORE
F601	1	XU210700N5	CRYSTAL FILTER 10.7 MHZ 10M15B
F602	1	FG455304E0	CERAMIC FILTER 455 KHZ CFU455E
F701	1	FF1107070R	CERAMIC FILTER 10.7 MHZ 10.7MA5
F702	1	FF1107070R	CERAMIC FILTER 10.7 MHZ 10.7MA5
F703	1	FG455304H0	CERAMIC FILTER 455 KHZ CFU455H2
F901	1	XU210700N1	CRYSTAL FILTER 10.7 MHZ 10M15A
F902	1	FG455306HR	CERAMIC FILTER 455 KHZ CFW455HT
H001	1	QK0077804R	INTERNAL SPEAKER
J001	1	YJ0100294R	EXTERNAL SPEAKER JACK
J002	1	YJ0100294R	RECORD JACK
J003	1	YJ0601069R	DC 8.0 V OUTPUT JACK
J004	1	YJ0400156R	DC 13.8 V INPUT JACK
J081	1	YJ0100295R	HEADPHONE JACK
J101	1	YJ0700366R	9 PIN JACK
J102	1	YJ0700367R	11 PIN JACK
J103	1	YJ0700368R	14 PIN JACK
J104	1	YJ0700368R	14 PIN JACK
J105	1	YP0700302R	13 PIN PLUG
J106	1	YP0700303R	8 PIN PLUG
J107	1	YP0700304R	11 PIN PLUG
J108	1	YP0690167R	2 PIN PLUG
J301	1	YP0690180R	2 PIN PLUG
J302	1	YJ0700367R	11 PIN JACK
J303	1	YP06004730	13 PIN PLUG
L001	1	LA5501810R	ANTENNA COIL
L002	1	LA5501810R	ANTENNA COIL
L003	1	LC1103015R	10 UH CHOKE COIL
L004	1	LC1103015R	10 UH CHOKE COIL
L005	1	LC2173001R	17 UH CHOKE COIL
L301	1	KA076X001R	DC/DC CONVERTER CPS1181N
L302	1	LC1366001R	36 MH CHOKE COIL
L303	1	LC1366001R	36 MH CHOKE COIL
L304	1	LC1472009R	4.7 UH CHOKE COIL
L305	1	LC1472009R	4.7 UH CHOKE COIL
L306	1	LC1472009R	4.7 UH CHOKE COIL
L307	1	LC1472009R	4.7 UH CHOKE COIL
L401	1	LC1103015R	10 UH CHOKE COIL
L501	1	LA5501807R	ANTENNA COIL
L502	1	LA5501811R	ANTENNA COIL
L503	1	LA5501808R	ANTENNA COIL
L504	1	LC1103015R	10 UH CHOKE COIL
L701	1	LC1682015R	6.8 UH CHOKE COIL
L702	1	LC11050090	1000 UH CHOKE COIL
L901	1	LA5501807R	ANTENNA COIL
L902	1	LA5501811R	ANTENNA COIL
L903	1	LA5501808R	ANTENNA COIL
L904	1	LC1103015R	10 UH CHOKE COIL
L905	1	LA5501809R	ANTENNA COIL
L906	1	LI5501803R	I.F.T. 455 KHZ
L907	1	LC1222008R	0.22 UH CHOKE COIL
P001	1	YP0690175R	4 PIN PLUG

REF. DESIG.	Q'TY	PART NO.	DESCRIPTION
P002	1	YP0690176R	10 PIN PLUG
P003	1	YP0690174R	6 PIN PLUG
P004	1	YP0690169R	2 PIN PLUG
P005	1	YP0690172R	3 PIN PLUG
P006	1	YP0690177R	9 PIN PLUG
P007	1	YP0690168R	7 PIN PLUG
P008	1	YP0690175R	4 PIN PLUG
P009	1	YP0690169R	2 PIN PLUG
P010	1	YP0690170R	5 PIN PLUG
P041	1	YP0700301R	7 PIN PLUG
P051	1	YJ10001560	ANTENNA CONNECTOR
P052	1	YP0690173R	3 PIN PLUG
P053	1	AW0100101R	TUNER
P401	1	YP0690178R	8 PIN PLUG
P402	1	YP0690171R	7 PIN PLUG
P403	1	YP0700301R	7 PIN PLUG
P404	1	YP0700301R	7 PIN PLUG
P501	1	YP0700301R	7 PIN PLUG
P502	1	YP0700301R	7 PIN PLUG
P601	1	YP0700301R	7 PIN PLUG
P602	1	YP0700301R	7 PIN PLUG
P701	1	YP0700301R	7 PIN PLUG
P702	1	YP0700301R	7 PIN PLUG
P801	1	YP0700301R	7 PIN PLUG
P802	1	YP0700301R	7 PIN PLUG
P901	1	YP0700301R	7 PIN PLUG
P902	1	YP0700301R	7 PIN PLUG
PD01	1	WZ076X0010	MAIN CONT/DISPLAY P.C.BOARD
PD02	1	WZ076X0020	KEY BOARD P.C.BOARD
PD03	1	WZ076X0030	SUB CONTROL P.C.BOARD
PD04	1	WZ076X0040	FIRST LOCAL P.C.BOARD
PD05	1	WZ076X0050	SECOND LOCAL P.C.BOARD
PD06	1	WZ076X0060	FM-N THIRD IF P.C.BOARD
PD07	1	WZ076X0070	FM-W/AM P.C.BOARD
PD08	1	WZ076X0080	AUDIO SIGNAL SWITCHING P.C.BOARD
PD09	1	WZ076X0090	ANALYZER P.C.BOARD
PM01	1	WZ076X0102	MAIN P.C.BOARD
PM02	1	WZ076X0110	VOLUME P.C.BOARD
PM03	1	WZ076X0120	ATTENUATOR P.C.BOARD
PM05	1	WZ076X0140	MODE/VOLTAGE/MUTE P.C.BOARD
Q001	1	HD2000109R	DIODE 1S2588
Q002	1	HD20011050	DIODE 1S1555
Q003	1	HD20011050	DIODE 1S1555
Q004	1	HT305360F0	2SC536SP(F)
Q005	1	HT329991ER	2SC2999E
Q006	1	HD2000109R	DIODE 1S2588
Q007	1	HD2000109R	DIODE 1S2588
Q008	1	HD2000109R	DIODE 1S2588
Q009	1	HD2000109R	DIODE 1S2588
Q010	1	HT305360F0	2SC536SP(F)
Q011	1	BA2000605R	DIGITAL TRANSISTOR RN1206
Q012	1	BA2000705R	DIGITAL TRANSISTOR RN1207
Q013	1	HD20011050	DIODE 1S1555
Q014	1	HT305360F0	2SC536SP(F)
Q016	1	HT310201AR	2SC1020(Y)
Q017	1	HC9102520R	REGULATOR M5236L
Q018	1	HD2000822R	DIODE SR1M-4
Q019	1	HC1024005R	REGULATOR TA78005AP
Q020	1	BA1000605R	DIGITAL TRANSISTOR RN2206
Q021	1	BA1000605R	DIGITAL TRANSISTOR RN2206

Matthias Bopp www.dd1us.de

REF. DESIG.	QTY	PART NO.	DESCRIPTION
Q022	1	BA1000605R	DIGITAL TRANSISTOR RN2206
Q023	1	HD20011050	DIODE 1S1555
Q024	1	HD20011050	DIODE 1S1555
Q025	1	HD20011050	DIODE 1S1555
Q026	1	HD20011050	DIODE 1S1555
Q027	1	HC1023905R	AF POWER AMP TA7220AP
Q028	1	HD2000822R	DIODE SR1M-4
Q041	1	BA1000605R	DIGITAL TRANSISTOR RN2206
Q042	1	BA1000605R	DIGITAL TRANSISTOR RN2206
Q043	1	BA1000605R	DIGITAL TRANSISTOR RN2206
Q044	1	BA1000605R	DIGITAL TRANSISTOR RN2206
Q045	1	BA2000705R	DIGITAL TRANSISTOR RN1207
Q051	1	HZ2002405R	DIODE 1SS269
Q052	1	HX327121C0	2SC2712(Y)
Q101	1	HC1008320R	MAIN MICROPROCESSOR M50932-116FP
Q102	1	HC1008301R	INTERFACE HD6321-FP
Q103	1	HC1003818R	RAM MB8418-20L
Q104	1	HC700420Z0	INVERTER HD74HC04FP
Q105	1	HC405300Z0	SELECTOR HD14053BFP
Q106	1	HC10182050	AND GATE TC4S81F
Q107	1	HC1008601R	COMMON DRIVER HD44105H
Q108	1	HC1008701R	COLUMN DRIVER HD44102CH
Q109	1	HC1008701R	COLUMN DRIVER HD44102CH
Q110	1	HC1025503R	VOLTAGE DEVIDER LA5311M
Q111	1	BA20001050	DIGITAL TRANSISTOR RN1409
Q112	1	BA1000705R	DIGITAL TRANSISTOR RN2406
Q113	1	HX113621AR	2SA1362(GR)
Q114	1	HX329821AR	2SC2982(B)
Q115	1	HZ20009050	DIODE 1SS184
Q116	1	HZ20012050	DIODE 1SS272
Q117	1	HZ20008050	DIODE 1SS181
Q118	1	HZ2002305R	DIODE 1SS193
Q119	1	KZ0500200R	LCD DISPLAY
Q201	1	HC1008801R	SELECTOR HD14051BFP
Q202	1	HZ20012050	DIODE 1SS272
Q203	1	HZ20012050	DIODE 1SS272
Q204	1	HZ20012050	DIODE 1SS272
Q205	1	HZ2002305R	DIODE 1SS193
Q207	1	HZ2002305R	DIODE 1SS193
Q210	1	HZ2002305R	DIODE 1SS193 [C]
Q301	1	HC1008001R	SUB MICROPROCESSOR HD6301Y0G55
Q302	1	HC1002426R	A/D CONVERTER MSM5204ARS
Q303	1	HC713900Z0	ADDRESS SELECTOR HD74HC238
Q304	1	HC700420Z0	INVERTER HD74HC04FP
Q305	1	HC10010530	VOLTAGE DETECTOR S-8054ALB
Q306	1	HC10053370	IC TL7705ACPS
Q307	1	HC10182050	AND GATE TC4S81F
Q308	1	HC1008220R	REGILATOR M5231TL
Q309	1	HC1023705R	REGULATOR TA78008AP
Q310	1	HC1023805R	REGULATOR TA78006AP
Q311	1	HT326551AR	2SC2655(Y)
Q312	1	HC1008201R	HA17431P
Q313	1	HC1008201R	HA17431P
Q314	1	HD30036010	ZENNER DIODE HZ6A-1
Q315	1	HC1002532R	PHOTO COUPLER PC317
Q316	1	BA2000505R	DIGITAL TRANSISTOR RN1406
Q401	1	HC1201006R	AMP UPC1676G
Q402	1	HC10101060	PRESCARER IC UPB566AC
Q403	1	BA2000505R	DIGITAL TRANSISTOR RN1406
Q404	1	HC1003717R	PLL IC MC145158-P1

REF. DESIG.	QTY	PART NO.	DESCRIPTION
Q406	1	HC10014090	L.P.F NJM4558S
Q407	1	HC723801FR	BAND SELECTOR HD74HC238
Q408	1	BA2000505R	DIGITAL TRANSISTOR RN1406
Q409	1	BA2000505R	DIGITAL TRANSISTOR RN1406
Q410	1	BA2000505R	DIGITAL TRANSISTOR RN1406
Q411	1	BA2000505R	DIGITAL TRANSISTOR RN1406
Q412	1	BA1000705R	DIGITAL TRANSISTOR RN2406
Q413	1	BA1000705R	DIGITAL TRANSISTOR RN2406
Q414	1	BA1000705R	DIGITAL TRANSISTOR RN2406
Q415	1	BA1000705R	DIGITAL TRANSISTOR RN2406
Q416	1	HX3342901R	2SC3429
Q417	1	HX3342901R	2SC3429
Q501	1	HC10097050	MIX/AMP/VCO TA7358P
Q502	1	HD40006090	DIODE 1S2139B
Q503	1	HC1008120R	PLL IC M54927P
Q504	1	HD20011050	DIODE 1S1555
Q505	1	HX327121C0	2SC2712(Y)
Q506	1	HX327121C0	2SC2712(Y)
Q601	1	HX327141B0	2SC2714(O)
Q602	1	HC10007420	THIRD IF IC TK10420D
Q603	1	HD20011050	DIODE 1S1555
Q604	1	HD10002020	DIODE 0A90A
Q605	1	HD10002020	DIODE 0A90A
Q606	1	HX327141B0	2SC2714(O)
Q701	1	HX327141B0	2SC2714(O)
Q702	1	HC1009421R	FM-W/AM DETECTOR IC BA4220B
Q703	1	HX327141B0	2SC2714(O)
Q704	1	HX327121C0	2SC2712(Y)
Q705	1	HX327121C0	2SC2712(Y)
Q801	1	HD20011050	DIODE 1S1555
Q802	1	HD20011050	DIODE 1S1555
Q803	1	HD20011050	DIODE 1S1555
Q804	1	HX327121C0	2SC2712(Y)
Q805	1	HD20011050	DIODE 1S1555
Q806	1	HD20011050	DIODE 1S1555
Q807	1	HD20011050	DIODE 1S1555
Q808	1	HX327121C0	2SC2712(Y)
Q809	1	HD10002020	DIODE 0A90A
Q810	1	HD10002020	DIODE 0A90A
Q811	1	HX327121C0	2SC2712(Y)
Q901	1	HC10097050	MIX/AMP/VCO TA7358P
Q902	1	HD40006090	VARI-CAP DIODE 1S2139B
Q903	1	HC1008120R	PLL IC M54927P
Q904	1	HD20011050	DIODE 1S1555
Q905	1	HX327121C0	2SC2712(Y)
Q906	1	HX327121C0	2SC2712(Y)
Q907	1	HX327141B0	2SC2714(O)
Q908	1	HX327141B0	2SC2714(O)
Q909	1	HC1023605R	AMP/DETECTOR TA7303P
Q910	1	HD20011050	DIODE 1S1555
R001	1	GD05102140	1 KOHM 1/4W +-5%
R002	1	GD05222140	2.2 KOHM 1/4W +-5%
R003	1	GD05103140	10 KOHM 1/4W +-5%
R004	1	GD05000140	0 OHM 1/4W
R005	1	GD05102160	1 KOHM 1/6W +-5%
R006	1	GD05334160	330 KOHM 1/6W +-5%
R007	1	GD05471140	470 OHM 1/4W +-5%
R008	1	GD05151160	150 OHM 1/6W +-5%
R009	1	GD05222160	2.2 KOHM 1/6W +-5%
R010	1	GD05221160	220 OHM 1/6W +-5%

Matthias Bopp www.dd1us.de

REF. DESIG.	Q'TY	PART NO.	DESCRIPTION
R011	1	GD05222160	2.2 KOHM 1/6W +-5%
R012	1	GD05222160	2.2 KOHM 1/6W +-5%
R013	1	GD05221160	220 OHM 1/6W +-5%
R014	1	GD05222160	2.2 KOHM 1/6W +-5%
R015	1	GD05103160	10 KOHM 1/6W +-5%
R016	1	GD05473160	47 KOHM 1/6W +-5%
R017	1	GD05822160	8.2 KOHM 1/6W +-5%
R018	1	GD05333160	33 KOHM 1/6W +-5%
R020	1	GD05473160	47 KOHM 1/6W +-5%
R021	1	GD05473160	47 KOHM 1/6W +-5%
R022	1	GD05222160	2.2 KOHM 1/6W +-5%
R024	1	GD05333160	33 KOHM 1/6W +-5%
R025	1	GD0551216R	5.1 KOHM 1/6W +-5%
R026	1	GD05153160	15 KOHM 1/6W +-5%
R027	1	GD05102160	1 KOHM 1/6W +-5%
R028	1	GD05221160	220 OHM 1/6W +-5%
R029	1	KR076X001R	180 OHM 3W
R030	1	GD05223160	22 KOHM 1/6W +-5%
R031	1	GD05102140	1 KOHM 1/4W +-5%
R033	1	GD05160140	16 OHM 1/4W +-5%
R034	1	RA0222076O	VARIABLE RESISTOR 2.2 KOHM
R035	1	RA0502040R	VARIABLE RESISTOR 5 KOHM
R036	1	RA0103073R	VARIABLE RESISTOR 10 KOHM
R037	1	GD05101140	100 OHM 1/4W +-5%
R038	1	GD05104160	100 KOHM 1/6W +-5%
R039	1	RA0202027R	VARIABLE RESISTOR 2 KOHM
R041	1	RA0223090O	VARIABLE RESISTOR 20 KOHM
R051	1	GD05102160	1 KOHM 1/6W +-5%
R052	1	NI05151110	150 OHM 1/10W +-5%
R053	1	NI05102110	1 KOHM 1/10W +-5%
R054	1	NI05102110	1 KOHM 1/10W +-5%
R055	1	NI05103110	10 KOHM 1/10W +-5%
R056	1	NI05333110	33 KOHM 1/10W +-5%
R081	1	BR1103002R	ROTARY CHANNEL SELECTOR
R082	1	RB0203027R	VARIABLE RESISTOR 20 KOHM
R083	1	RB0203028R	VARIABLE RESISTOR 20 KOHM
R084	1	NI05102110	1 KOHM 1/10W +-5%
R085	1	NI0575411R	750 OHM 1/10W +-5%
R101	1	BW0510413R	RESISTOR ARRAY HM16B104J
R102	1	RA01030760	VARIABLE RESISTOR 10 KOHM
R103	1	HH0000301R	THERMISTOR TMD1510H
R104	1	GJ05622020	6.2 KOHM 2W +-5%
R105	1	NI05221110	220 OHM 1/10W +-5%
R106	1	NI05104110	100 KOHM 1/10W +-5%
R107	1	NI05472110	4.7 KOHM 1/10W +-5%
R108	1	NI05104110	100 KOHM 1/10W +-5%
R109	1	NI0268211R	6.8 KOHM 1/10W +-2%
R110	1	NI0268211R	6.8 KOHM 1/10W +-2%
R111	1	NI0268211R	6.8 KOHM 1/10W +-2%
R112	1	NI0215211R	1.5 KOHM 1/10W +-2%
R113	1	NI05104110	100 KOHM 1/10W +-5%
R114	1	NI05753110	75 KOHM 1/10W +-5%
R115	1	NI05105110	1 MOHM 1/10W +-5%
R116	1	NI05104110	100 KOHM 1/10W +-5%
R117	1	NI05104110	100 KOHM 1/10W +-5%
R118	1	NI05104110	100 KOHM 1/10W +-5%
R119	1	NI05102110	1 KOHM 1/10W +-5%
R120	1	NI05103110	10 KOHM 1/10W +-5%
R121	1	NI05823110	82 KOHM 1/10W +-5%
R122	1	NI05474110	470 KOHM 1/10W +-5%

REF. DESIG.	Q'TY	PART NO.	DESCRIPTION
R123	1	NI05474110	470 KOHM 1/10W +-5%
R124	1	NI05683110	68 KOHM 1/10W +-5%
R125	1	NI05103110	10 KOHM 1/10W +-5%
R126	1	NI05474110	470 KOHM 1/10W +-5%
R127	1	NI05104110	100 KOHM 1/10W +-5%
R129	1	NI0239311R	39 KOHM 1/10W +-2%
R130	1	NI05270110	27 OHM 1/10W +-5%
R131	1	NI05270110	27 OHM 1/10W +-5%
R132	1	NI05270110	27 OHM 1/10W +-5%
R133	1	NI05270110	27 OHM 1/10W +-5%
R134	1	NI05270110	27 OHM 1/10W +-5%
R135	1	NI05270110	27 OHM 1/10W +-5%
R136	1	NI01683110	68 KOHM 1/10W +-1%
R137	1	NI05272110	2.7 KOHM 1/10W +-5%
R138	1	NI05753110	75 KOHM 1/10W +-5%
R140	1	NI05473110	47 KOHM 1/10W +-5%
R141	1	NI05333110	33 KOHM 1/10W +-5%
R142	1	NI05104110	100 KOHM 1/10W +-5%
R301	1	BW05104040	RESISTOR ARRAY 100 KOHM 1/8W
R302	1	BW05104080	RESISTOR ARRAY 100 KOHM 1/8W
R303	1	GD05331140	330 OHM 1/4W +-5%
R304	1	GD05103140	10 KOHM 1/4W +-5%
R305	1	GD05752140	7.5 KOHM 1/4W +-5%
R306	1	KR076X002R	59 KOHM 1/4W +-1%
R307	1	GD05332140	3.3 KOHM 1/4W +-5%
R308	1	GD05681140	680 OHM 1/4W +-5%
R309	1	GD05102140	1 KOHM 1/4W +-5%
R310	1	GD05103140	10 KOHM 1/4W +-5%
R311	1	GD05433140	43 KOHM 1/4W +-5%
R312	1	NI05103110	10 KOHM 1/10W +-5%
R313	1	NI05104110	100 KOHM 1/10W +-5%
R314	1	NI05104110	100 KOHM 1/10W +-5%
R315	1	NI05104110	100 KOHM 1/10W +-5%
R316	1	NI05104110	100 KOHM 1/10W +-5%
R317	1	GD05471140	470 OHM 1/4W +-5%
R318	1	GJ05332010	3.3 KOHM 1W +-5%
~~R401~~	1	NI05000110	0 OHM 1/10W
R402	1	NI05221110	220 OHM 1/10W +-5%
R403	1	NI05101110	100 OHM 1/10W +-5%
R404	1	NI05103110	10 KOHM 1/10W +-5%
R405	1	NI05562110	5.6 KOHM 1/10W +-5%
R406	1	NI05473110	47 KOHM 1/10W +-5%
R407	1	NI05822110	8.2 KOHM 1/10W +-5%
R408	1	NI05822110	8.2 KOHM 1/10W +-5%
R409	1	NI05822110	8.2 KOHM 1/10W +-5%
R410	1	NI05822110	8.2 KOHM 1/10W +-5%
R411	1	NI05103110	10 KOHM 1/10W +-5%
R412	1	NI05102110	1 KOHM 1/10W +-5%
R413	1	NI05101110	100 OHM 1/10W +-5%
R414	1	NI05473110	47 KOHM 1/10W +-5%
R415	1	NI05473110	47 KOHM 1/10W +-5%
R416	1	NI05333110	33 KOHM 1/10W +-5%
R417	1	NI05104110	100 KOHM 1/10W +-5%
R418	1	NI05102110	1 KOHM 1/10W +-5%
R419	1	NI05331110	330 OHM 1/10W +-5%
R501	1	NI05103110	10 KOHM 1/10W +-5%
R502	1	NI05101110	100 OHM 1/10W +-5%
R503	1	NI05103110	10 KOHM 1/10W +-5%
R504	1	NI05104110	100 KOHM 1/10W +-5%
R505	1	NI05101110	100 OHM 1/10W +-5%

Matthias Bopp www.dd1us.de

REF. DESIG.	QTY	PART NO.	DESCRIPTION
R506	1	NI05103110	10 KOHM 1/10W +-5%
R507	1	NI05473110	47 KOHM 1/10W +-5%
R508	1	NI05101110	100 OHM 1/10W +-5%
R509	1	NI05152110	1.5 KOHM 1/10W +-5%
R510	1	NI05103110	10 KOHM 1/10W +-5%
R511	1	NI05332110	3.3 KOHM 1/10W +-5%
R512	1	NI05682110	6.8 KOHM 1/10W +-5%
R601	1	NI05334110	330 KOHM 1/10W +-5%
R602	1	NI05222110	2.2 KOHM 1/10W +-5%
R603	1	NI0530211R	3 KOHM 1/10W +-5%
R604	1	NI05102110	1 KOHM 1/10W +-5%
R605	1	NI0530211R	3 KOHM 1/10W +-5%
R606	1	NI05472110	4.7 KOHM 1/10W +-5%
R607	1	NI05154110	150 KOHM 1/10W +-5%
R608	1	NI05472110	4.7 KOHM 1/10W +-5%
R609	1	NI05152110	1.5 KOHM 1/10W +-5%
R610	1	NI05102110	1 KOHM 1/10W +-5%
R611	1	NI0551211R	5.1 KOHM 1/10W +-5%
R613	1	NI05152110	1.5 KOHM 1/10W +-5%
R614	1	NI05152110	1.5 KOHM 1/10W +-5%
R615	1	NI05473110	47 KOHM 1/10W +-5%
R616	1	NI05152110	1.5 KOHM 1/10W +-5%
R617	1	NI05220110	22 OHM 1/10W +-5%
R618	1	NI05102110	1 KOHM 1/10W +-5%
R619	1	NI05334110	330 KOHM 1/10W +-5%
R620	1	NI05222110	2.2 KOHM 1/10W +-5%
R621	1	NI05272110	2.7 KOHM 1/10W +-5%
R622	1	NI05103110	10 KOHM 1/10W +-5%
R701	1	NI05564110	560 KOHM 1/10W +-5%
R702	1	NI05331110	330 OHM 1/10W +-5%
R703	1	NI05102110	1 KOHM 1/10W +-5%
R704	1	NI05331110	330 OHM 1/10W +-5%
R705	1	NI05103110	10 KOHM 1/10W +-5%
R706	1	NI05100110	10 OHM 1/10W +-5%
R707	1	NI05561110	560 OHM 1/10W +-5%
R708	1	NI05103110	10 KOHM 1/10W +-5%
R709	1	NI05472110	4.7 KOHM 1/10W +-5%
R710	1	NI05220110	22 OHM 1/10W +-5%
R711	1	NI05182110	1.8 KOHM 1/10W +-5%
R712	1	NI0551211R	5.1 KOHM 1/10W +-5%
R713	1	NI05821110	820 OHM 1/10W +-5%
R714	1	NI05472110	4.7 KOHM 1/10W +-5%
R715	1	NI05682110	6.8 KOHM 1/10W +-5%
R716	1	NI05182110	1.8 KOHM 1/10W +-5%
R717	1	HH0001003R	THERMISTOR STD1000
R718	1	GD05334160	330 KOHM 1/6W +-5%
R719	1	NI05154110	150 KOHM 1/10W +-5%
R720	1	NI05473110	47 KOHM 1/10W +-5%
R801	1	NI05102110	1 KOHM 1/10W +-5%
R802	1	NI05223110	22 KOHM 1/10W +-5%
R803	1	NI05103110	10 KOHM 1/10W +-5%
R804	1	NI05102110	1 KOHM 1/10W +-5%
R805	1	NI05223110	22 KOHM 1/10W +-5%
R806	1	NI05103110	10 KOHM 1/10W +-5%
R807	1	NI05102110	1 KOHM 1/10W +-5%
R808	1	NI05223110	22 KOHM 1/10W +-5%
R809	1	NI05103110	10 KOHM 1/10W +-5%
R810	1	NI05473110	47 KOHM 1/10W +-5%
R811	1	NI05332110	3.3 KOHM 1/10W +-5%
R813	1	NI05472110	4.7 KOHM 1/10W +-5%

REF. DESIG.	QTY	PART NO.	DESCRIPTION
R814	1	NI05223110	22 KOHM 1/10W +-5%
R815	1	NI05223110	22 KOHM 1/10W +-5%
R816	1	NI05102110	1 KOHM 1/10W +-5%
R817	1	NI05223110	22 KOHM 1/10W +-5%
R818	1	NI05223110	22 KOHM 1/10W +-5%
R819	1	NI05102110	1 KOHM 1/10W +-5%
R820	1	NI05102110	1 KOHM 1/10W +-5%
R821	1	NI05103110	10 KOHM 1/10W +-5%
R822	1	NI05394110	390 KOHM 1/10W +-5%
R823	1	NI05102110	1 KOHM 1/10W +-5%
R824	1	NI05103110	10 KOHM 1/10W +-5%
R825	1	NI05471110	470 OHM 1/10W +-5%
R901	1	NI05471110	470 OHM 1/10W +-5%
R902	1	NI05101110	100 OHM 1/10W +-5%
R903	1	NI05104110	100 KOHM 1/10W +-5%
R904	1	NI05101110	100 OHM 1/10W +-5%
R905	1	NI05103110	10 KOHM 1/10W +-5%
R906	1	NI05473110	47 KOHM 1/10W +-5%
R907	1	NI05101110	100 OHM 1/10W +-5%
R908	1	NI05222110	2.2 KOHM 1/10W +-5%
R909	1	NI05103110	10 KOHM 1/10W +-5%
R910	1	NI05332110	3.3 KOHM 1/10W +-5%
R911	1	NI05222110	2.2 KOHM 1/10W +-5%
R912	1	NI05102110	1 KOHM 1/10W +-5%
R913	1	NI05334110	330 KOHM 1/10W +-5%
R914	1	NI05102110	1 KOHM 1/10W +-5%
R915	1	NI05102110	1 KOHM 1/10W +-5%
R916	1	NI05334110	330 KOHM 1/10W +-5%
R917	1	NI05332110	3.3 KOHM 1/10W +-5%
R918	1	NI05102110	1 KOHM 1/10W +-5%
R919	1	NI05222110	2.2 KOHM 1/10W +-5%
R920	1	NI05472110	4.7 KOHM 1/10W +-5%
R921	1	NI05123110	12 KOHM 1/10W +-5%
R922	1	NI05102110	1 KOHM 1/10W +-5%
R923	1	NI05101110	100 OHM 1/10W +-5%
R924	1	NI05103110	10 KOHM 1/10W +-5%
R925	1	NI05103110	10 KOHM 1/10W +-5%
S001	1	SP0101131R	ALL RESET SWITCH
S051	1	SS0202114R	SLIDE SWITCH
S101	1	SR0125001R	ROTARY CHANNEL SELECTOR
TP01	1	YL0901033R	TERMINAL
TP02	1	YL0901033R	TERMINAL
V101	1	IN1008093R	LAMP HRS-4120A
V102	1	IN1008093R	LAMP HRS-4120A
W001	1	YB0014060R	CONNECTIVE CORD
W002	1	YB0015100R	CONNECTIVE CORD
W003	1	YB0004023R	CONNECTIVE CORD
W004	1	YB0013056R	CONNECTIVE CORD
W019	1	YU0108001R	LEAD
W103	1	YB0016067R	11 PIN CONNECTIVE CORD
W201	1	WE076X0140	KEYBOARD-SUB FLEXIBLE P.C.BOARD
W301	1	WE076X0110	MAIN-SUB FLEXIBLE P.C.BOARD
W302	1	WE076X0120	MAIN-SUB FLEXIBLE P.C.BOARD
W303	1	WE076X0130	MAIN-SUB FLEXIBLE P.C.BOARD
X101	1	FQ0400404R	CERAMIC RESONATOR 4.0 MHZ
X301	1	FQ04004010	CERAMIC RESONATOR 4.0 MHZ
X401	1	JX1200311R	CRYSTAL 12.8 MHZ
X501	1	JX0400610R	CRYSTAL 4.5MHZ
X601	1	JX1000111R	CRYSTAL 10.245MHZ
X602	1	FH455301B0	CERAMIC DISCRI 455 KHZ
X701	1	FH107501BR	CERAMIC DISCRI 10.7 MHZ
X901	1	JX0400610R	CRYSTAL 4.5MHZ
X902	1	JX1000111R	CRYSTAL 10.245MHZ

Matthias Bopp www.dd1us.de

7. SCHEMATIC DIAGRAM

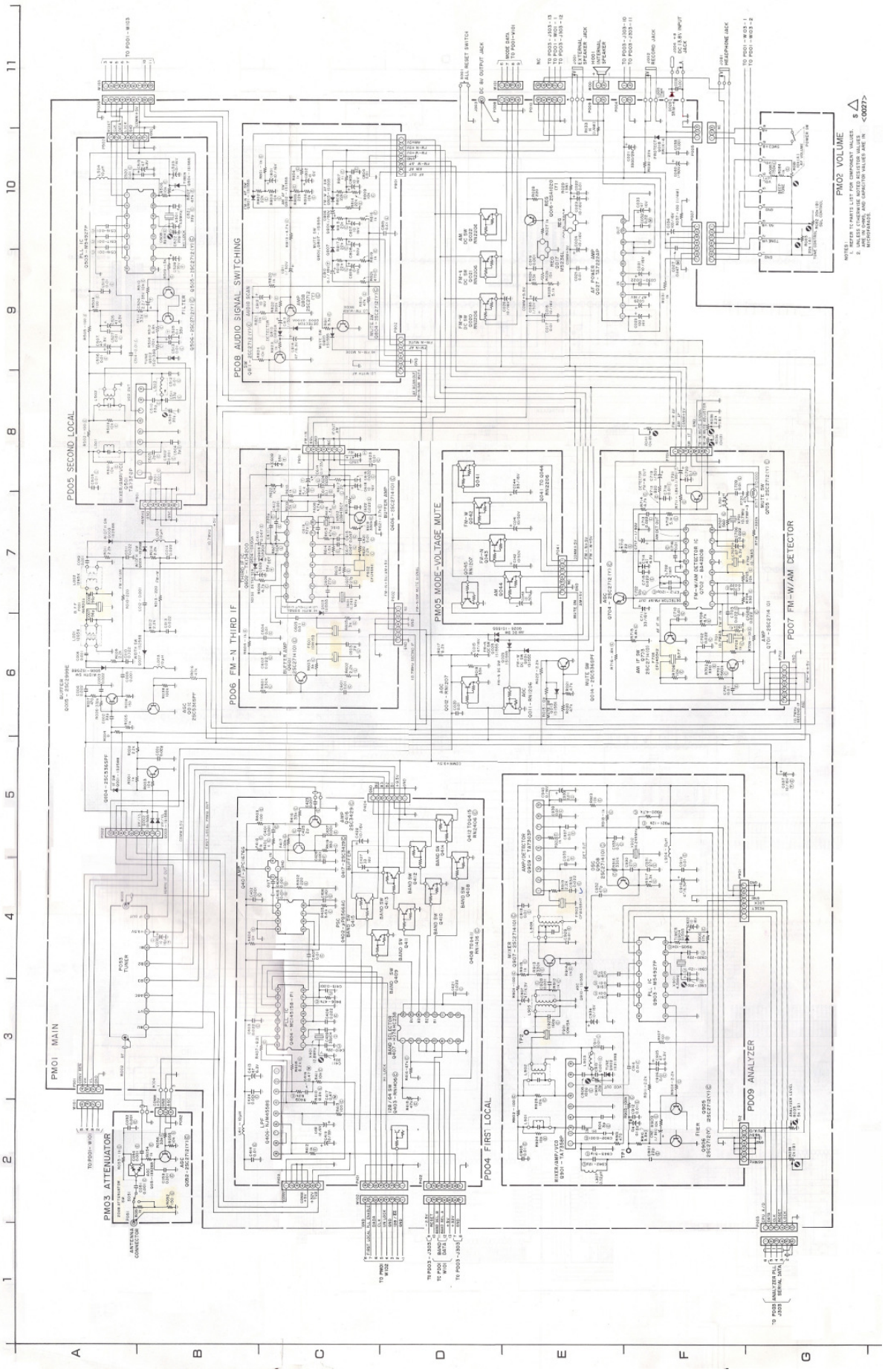

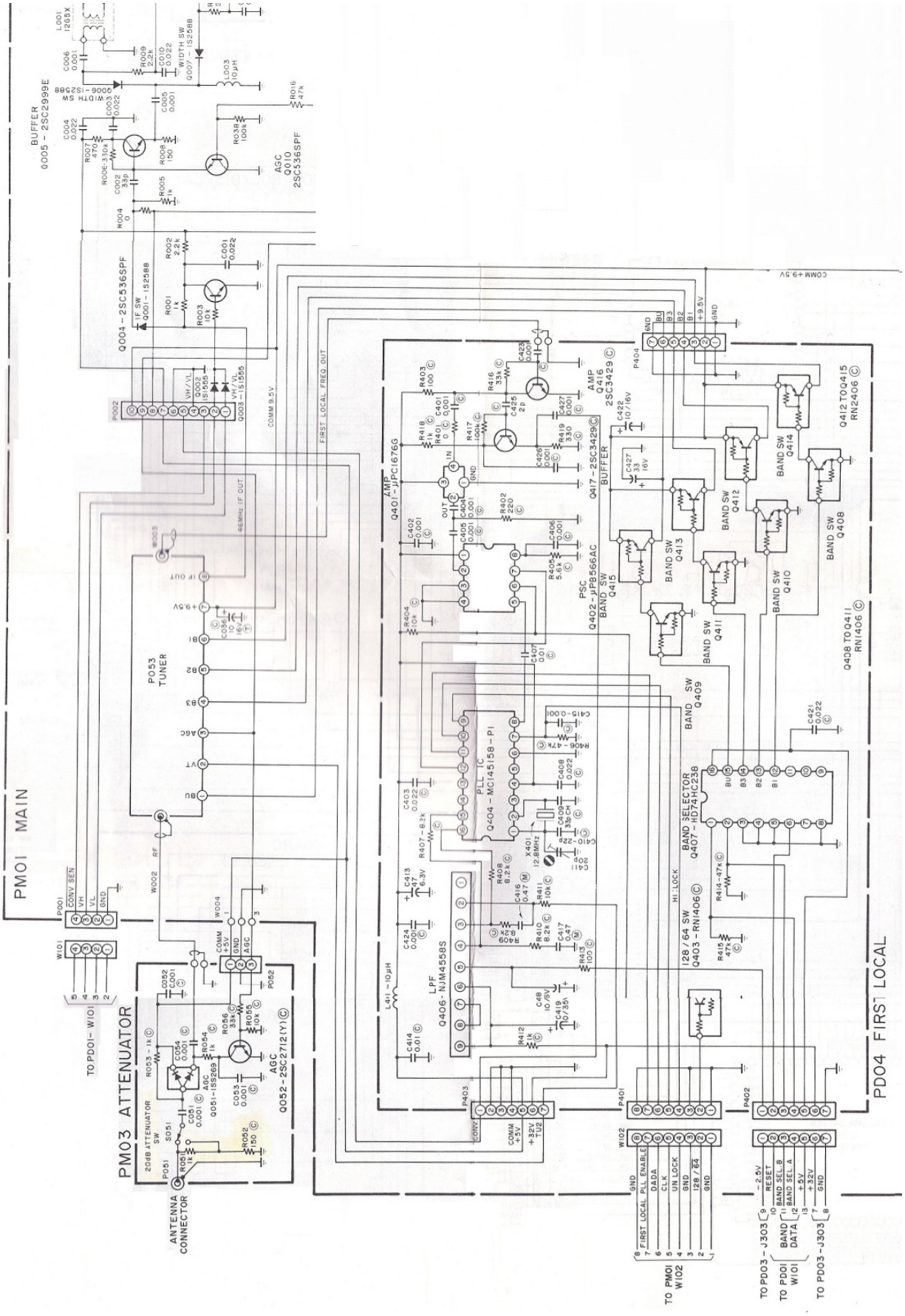
PM01 MAIN
PM03 ATTENUATOR
PD04 FIRST LOCAL
BUFFER Q005 - 2SC2999E
Q004 - 2SC536SPF
AGC Q010 2SC536SPF
AGC Q052 - 2SC2712(Y)
P053 TUNER
Q401 - μPC1676G
AMP Q416 2SC3429
BUFFER Q417 - 2SC3429
PSC Q402 - μPB566AC
BAND SW Q415
BAND SW Q413
BAND SW Q411
BAND SW Q409
BAND SW Q414
BAND SW Q412
BAND SW Q410
BAND SW Q408
Q412 TO Q415 RN2406
Q408 TO Q411 RN1406
PLL IC Q404 - MC145158 - P1
LPF Q406 - NJM4558S
BAND SELECTOR Q407 - HD74HC238
128 / 64 SW Q403 - RN1406
HI LOCK
46MHz IF OUT
FIRST LOCAL FREQ OUT
COMM 9.5V
COMM +9.5V
TO PD01 - W101
ANTENNA CONNECTOR
20dB ATTENUATOR SW
TO PM01 W102
TO PD03 - J303
TO PD01 W101
TO PD03 - J303

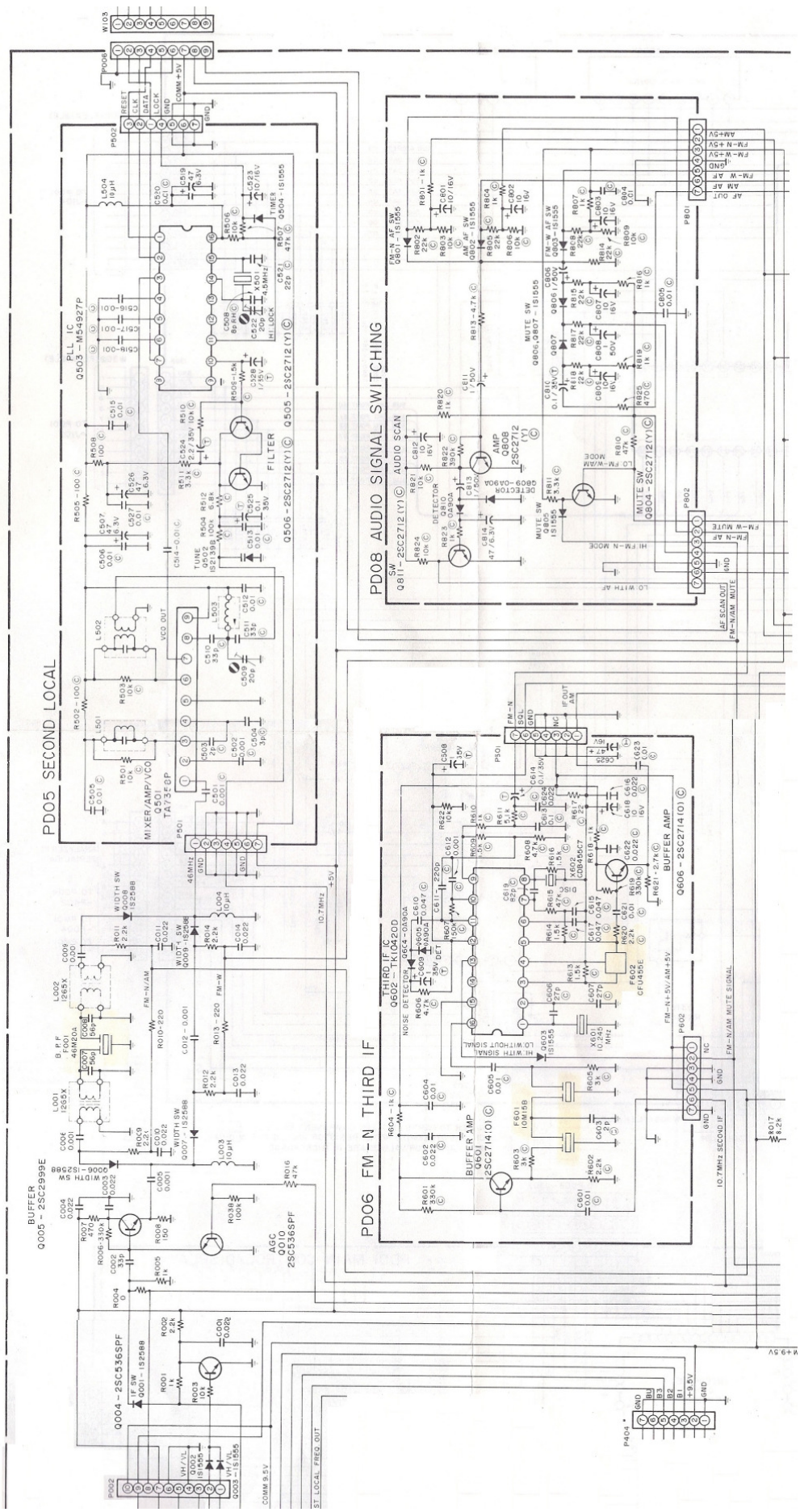
PD05 SECOND LOCAL
PD08 AUDIO SIGNAL SWITCHING
PD06 FM-N THIRD IF
PLL IC
Q503 – M54927P
FILTER
Q505 – 2SC2712(Y)
Q506 – 2SC2712(Y)
MIXER/AMP/VCO
Q501
TA7358P
AUDIO SCAN
DETECTOR
AMP
Q808
2SC2712
(Y)
MUTE SW
Q804 – 2SC2712(Y)
THIRD IF IC
Q602 – TK10420D
BUFFER AMP
Q601
2SC2714(O)
Q606 – 2SC2714(O)
BUFFER
Q005 – 2SC2999E
AGC
Q010
2SC536SPF
Q004 – 2SC536SPF
WIDTH SW
IF SW
W103
P006
P502
P801
P802
P501
P301
P602
P404
P002
46MHz
10.7MHz
+5V
COMM 9.5V
ST LOCAL FREQ OUT
10.7MHz SECOND IF
FM-N/AM MUTE SIGNAL
AF SCAN OUT
FM-N/AM MUTE

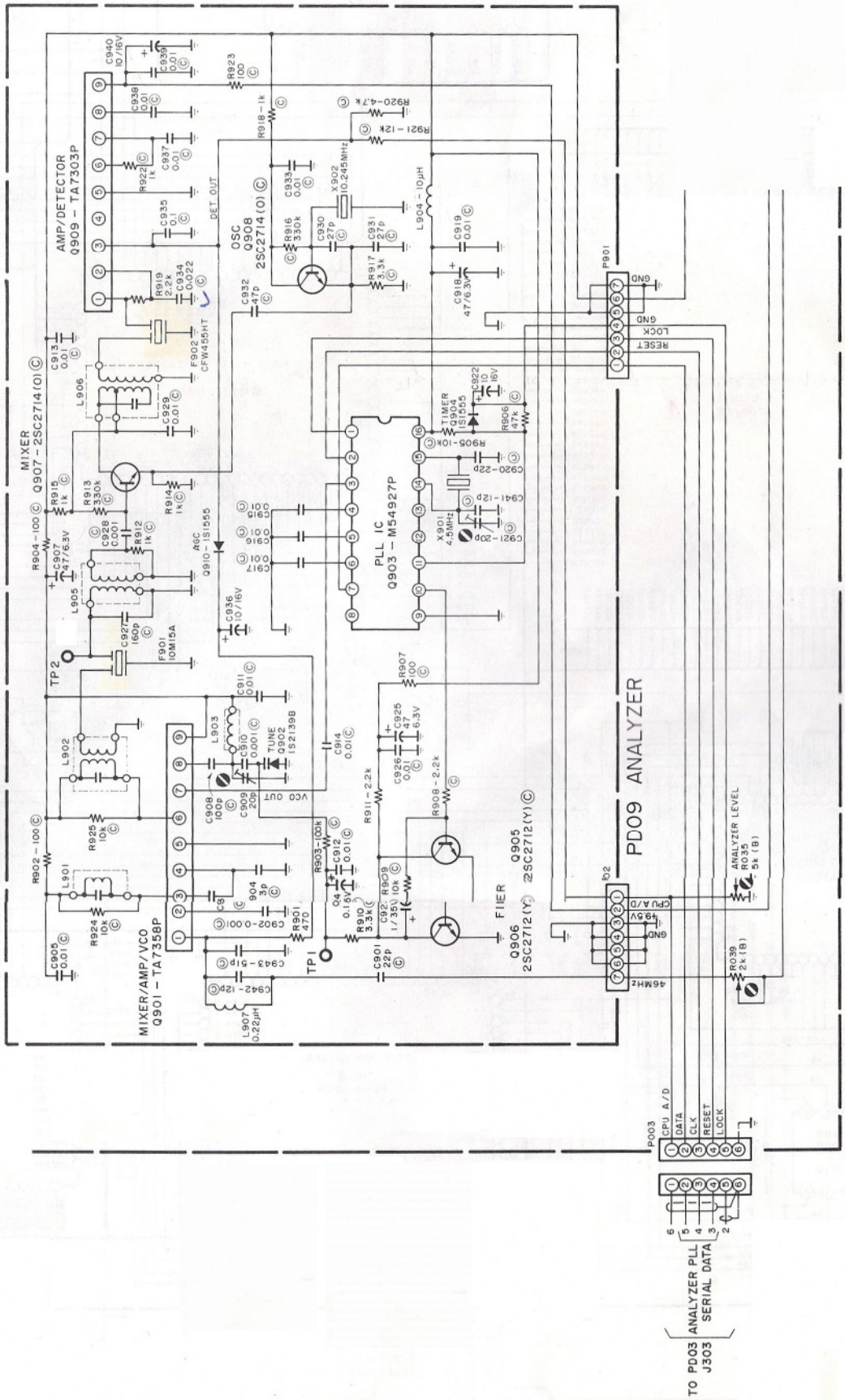
AMP/DETECTOR
Q909 - TA7303P
MIXER
Q907 - 2SC2714(O)
OSC
Q908
2SC2714(O)
PLL IC
Q903 - M54927P
MIXER/AMP/VCO
Q901 - TA7358P
Q905
2SC2712(Y)
Q906
2SC2712(Y)
PD09 ANALYZER
P901
GND
LOCK
RESET
P03
CPU A/D
DATA
CLK
RESET
LOCK
TO PD03
J303
ANALYZER PLL
SERIAL DATA
ANALYZER LEVEL
R035
5k (B)
TP1
TP2
DET OUT
VCO OUT
TIMER
Q904
1S1555
TUNE
Q902
1S2398
AGC
Q910 - 1S1555
X901
4.5MHz
X902
10.245MHz
F902
CFW455HT
F901
10M15A
46MHZ
+9.5V
CPU A/D

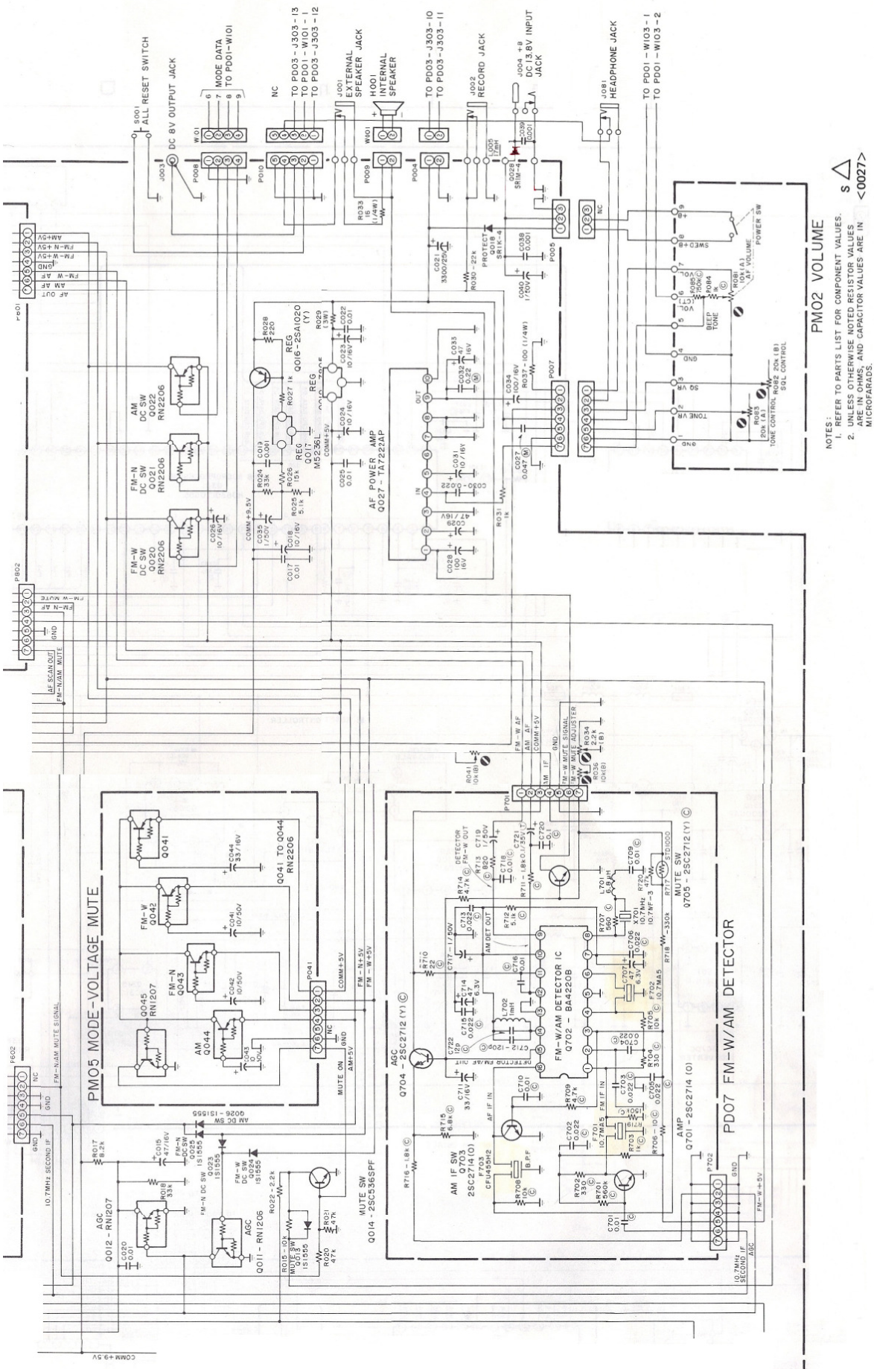
S001 ALL RESET SWITCH
J003 DC 8V OUTPUT JACK
W101 6 7 MODE DATA 8 9 TO PD01-W101
NC
TO PD03-J303-13
TO PD01-W101-1
TO PD03-J303-12
J001 EXTERNAL SPEAKER JACK
H001 INTERNAL SPEAKER
TO PD03-J303-10
TO PD03-J303-11
J002 RECORD JACK
J004 +B DC 13.8V INPUT JACK
J081 HEADPHONE JACK
TO PD01-W103-1
TO PD01-W103-2
PM02 VOLUME
POWER SW
AF VOLUME
BEEP TONE
TONE CONTROL
SQL CONTROL
AF POWER AMP Q027-TA7222AP
AM DC SW Q022 RN2206
FM-N DC SW Q021 RN2206
FM-W DC SW Q020 RN2206
PM05 MODE-VOLTAGE MUTE
Q041 TO Q044 RN2206
FM-W Q042
FM-N Q043
AM Q044
Q045 RN1207
MUTE SW Q014-2SC536SPF
AGC Q012-RN1207
AGC Q011-RN1206
AM DC SW Q026 1S1555
FM-N DC SW Q021 1S1555
FM-W DC SW Q024 1S1555
MUTE SW Q023 1S1555
AM IF SW Q703 2SC2714(O)
AGC Q704-2SC2712(Y)
FM-W/AM DETECTOR IC Q702-BA4220B
MUTE SW Q705-2SC2712(Y)
AMP Q701-2SC2714(O)
PD07 FM-W/AM DETECTOR
10.7MHz SECOND IF
FM-W/AM MUTE SIGNAL
COMM+9.5V
NOTES:
1. REFER TO PARTS LIST FOR COMPONENT VALUES.
2. UNLESS OTHERWISE NOTED RESISTOR VALUES ARE IN OHMS AND CAPACITOR VALUES ARE IN MICROFARADS.
S <0027>

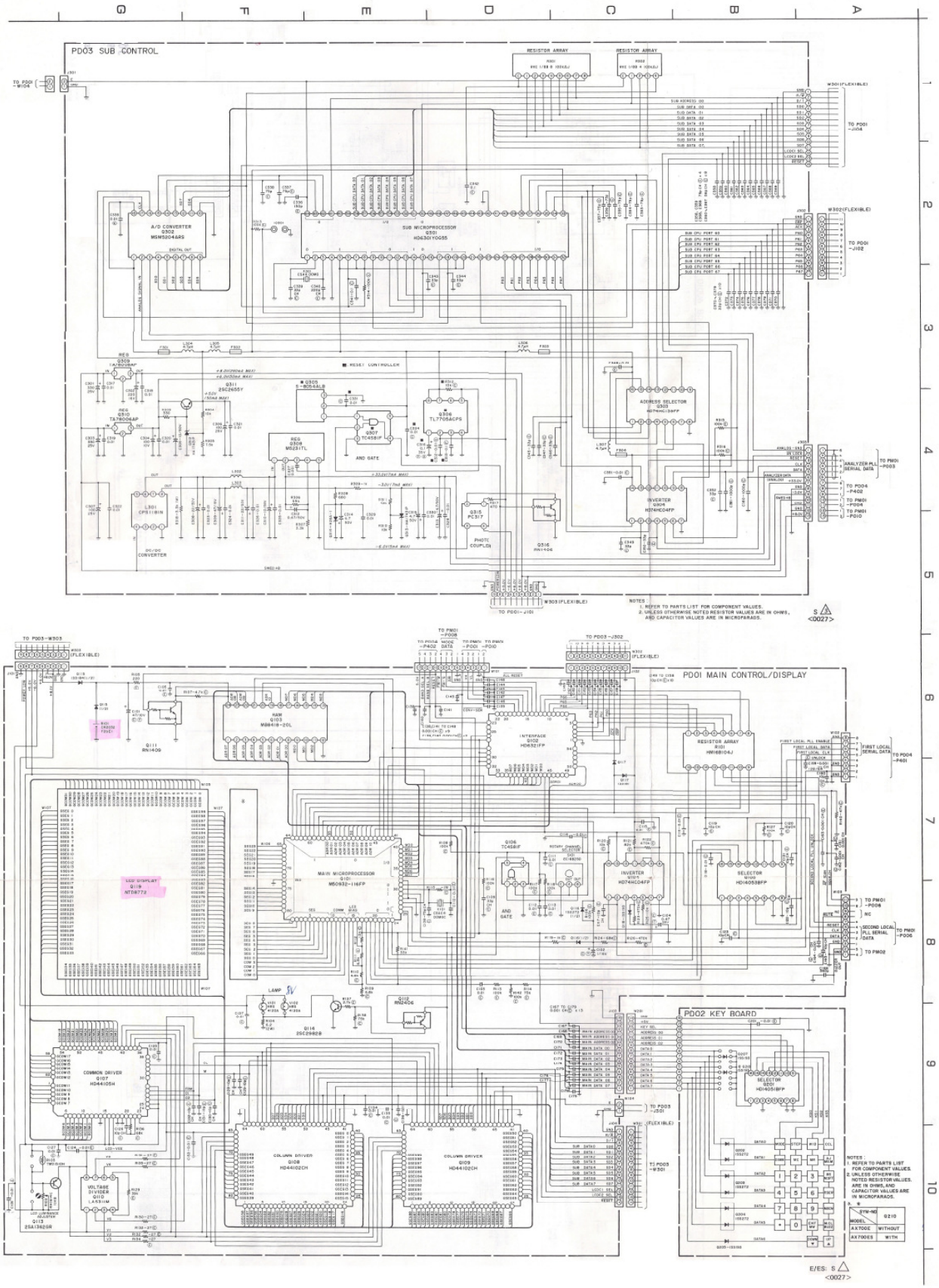
PD03 SUB CONTROL
PD01 MAIN CONTROL/DISPLAY
PD02 KEY BOARD
A/D CONVERTER
SUB MICROPROCESSOR
RESET CONTROLLER
ADDRESS SELECTOR
INVERTER
AND GATE
PHOTO COUPLER
DC/DC CONVERTER
RESISTOR ARRAY
INTERFACE
MAIN MICROPROCESSOR
LCD DISPLAY
COMMON DRIVER
COLUMN DRIVER
VOLTAGE DIVIDER
SELECTOR
LAMP
NOTES
1. REFER TO PARTS LIST FOR COMPONENT VALUES.
2. UNLESS OTHERWISE NOTED RESISTOR VALUES ARE IN OHMS, AND CAPACITOR VALUES ARE IN MICROFARADS.

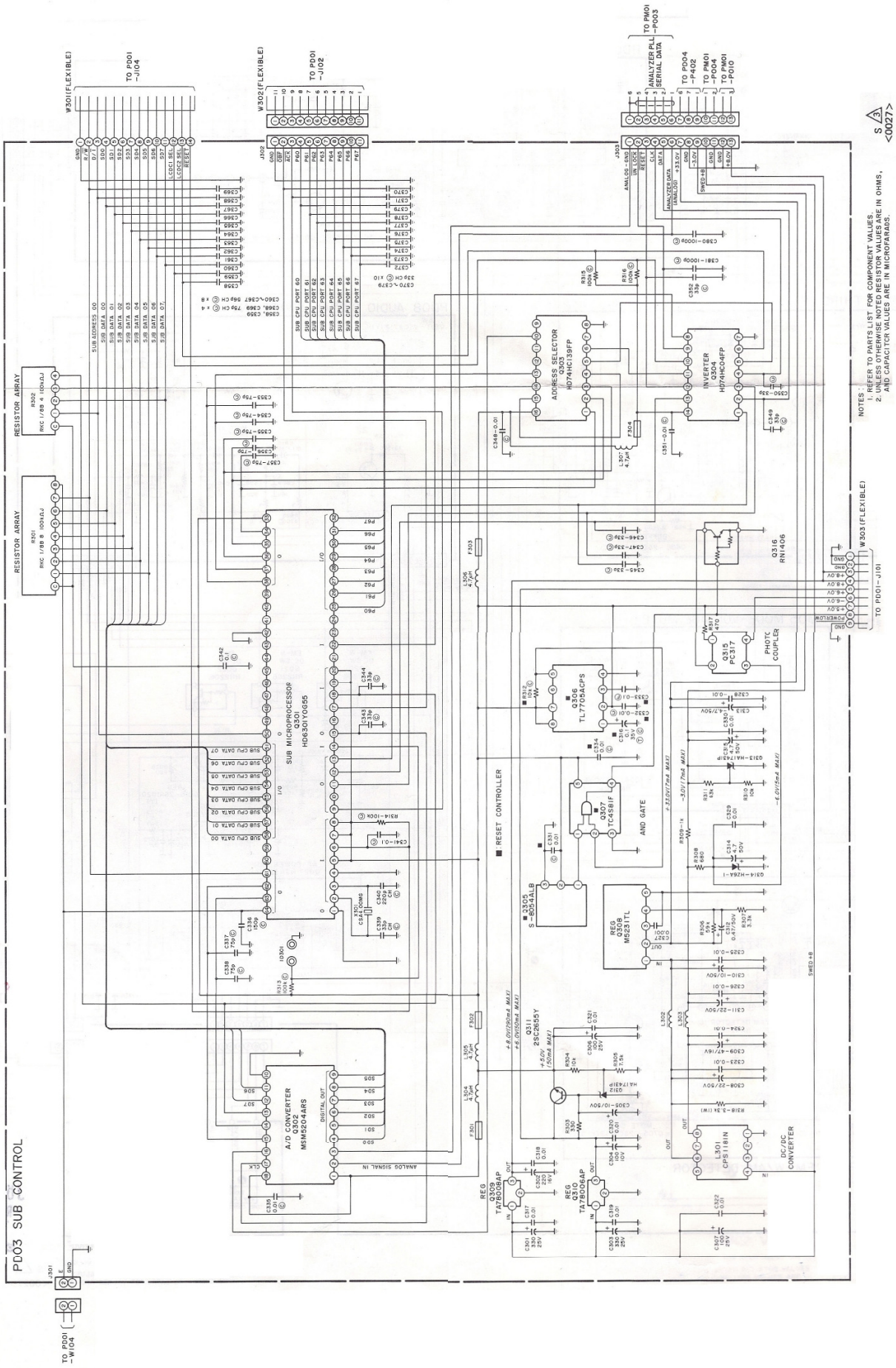
PD03 SUB CONTROL
SUB MICROPROCESSOR Q30 HD63010G55
A/D CONVERTER Q32 M5M5204ARS
ADDRESS SELECTOR Q303 HD74HC139FP
INVERTER Q304 HD74HC04FP
RESET CONTROLLER
AND GATE
Q306 TL7705ACPS
Q307 TC4S81F
Q308 M5231TL
Q309 S-8054ALB
Q311 2SC2655Y
Q315 PC317
PHOTO COUPLER
Q316 RN1406
L301 CPS1181N
DC/DC CONVERTER
REG Q310 TA78006AP
REG Q320 TA78006AP
RESISTOR ARRAY
RESISTOR ARRAY
W301(FLEXIBLE)
W302(FLEXIBLE)
W303(FLEXIBLE)
TO PD01 -J104
TO PD01 -J102
TO PD01 -J101
TO PD01 -W104
TO PM01 -P003
TO PD04 -P402
TO PM01 -P004
TO PM01 -P010
ANALYZER PLL SERIAL DATA
NOTES :
1. REFER TO PARTS LIST FOR COMPONENT VALUES.
2. UNLESS OTHERWISE NOTED RESISTOR VALUES ARE IN OHMS, AND CAPACITOR VALUES ARE IN MICROFARADS.
S 3
<0027>

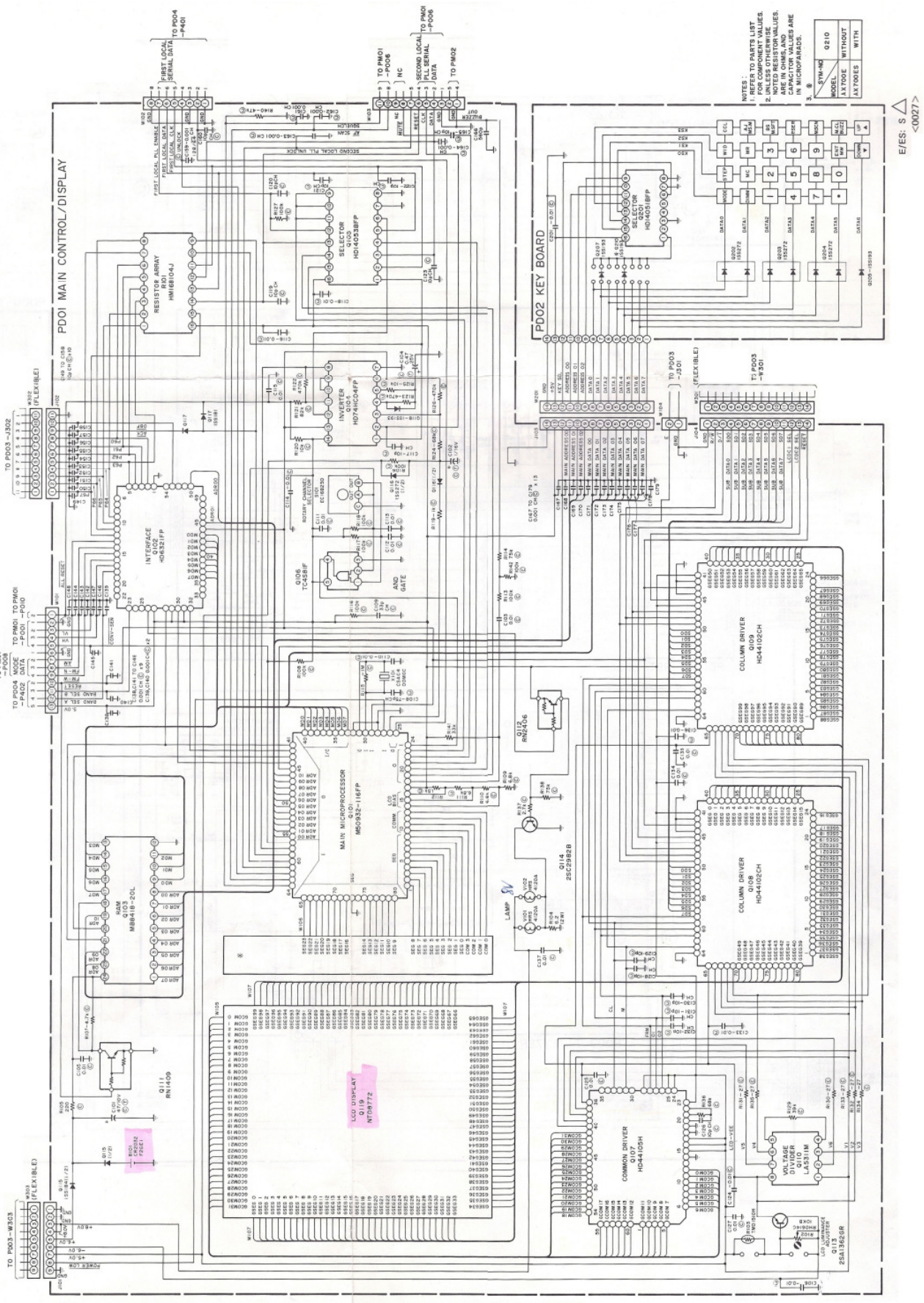
PD01 MAIN CONTROL/DISPLAY
PD02 KEY BOARD
MAIN MICROPROCESSOR
M50932-116FP
INTERFACE
HD6321FP
SELECTOR
HD14053BFP
INVERTER
HD74HC04FP
COLUMN DRIVER
HD44102CH
COMMON DRIVER
HD44105H
VOLTAGE DIVIDER
LA5311M
LCD DISPLAY
NT08172
RAM
M88418-20L
RESISTOR ARRAY
HM16B104J
AND GATE
TC4S81F
LAMP
TO PD03-J302
TO PD03-W303
TO PD04-P401
TO PM01-PD06
TO PD03-P201
E/ES: S
<0027>

8. COMPONENT OVERLAY

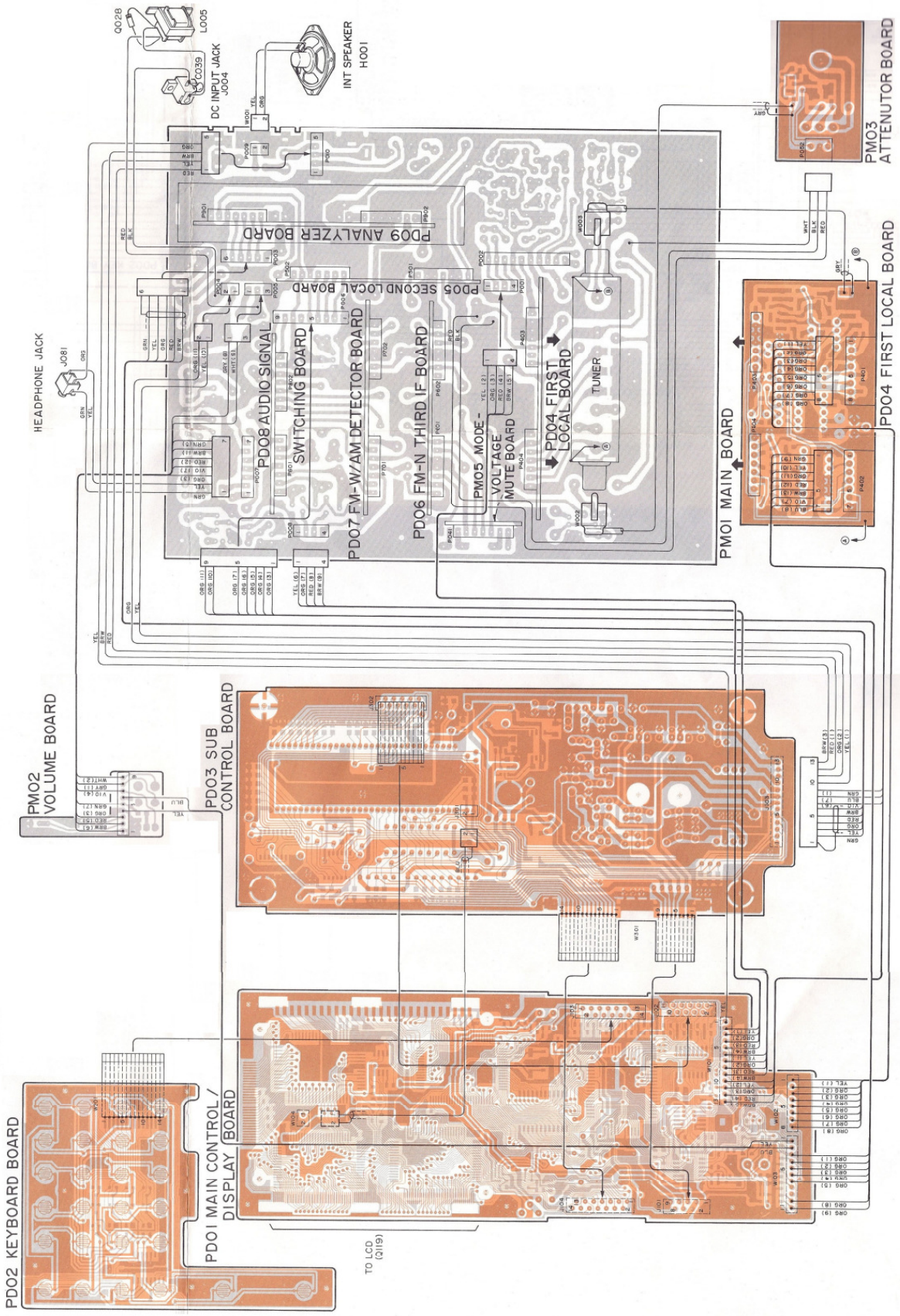

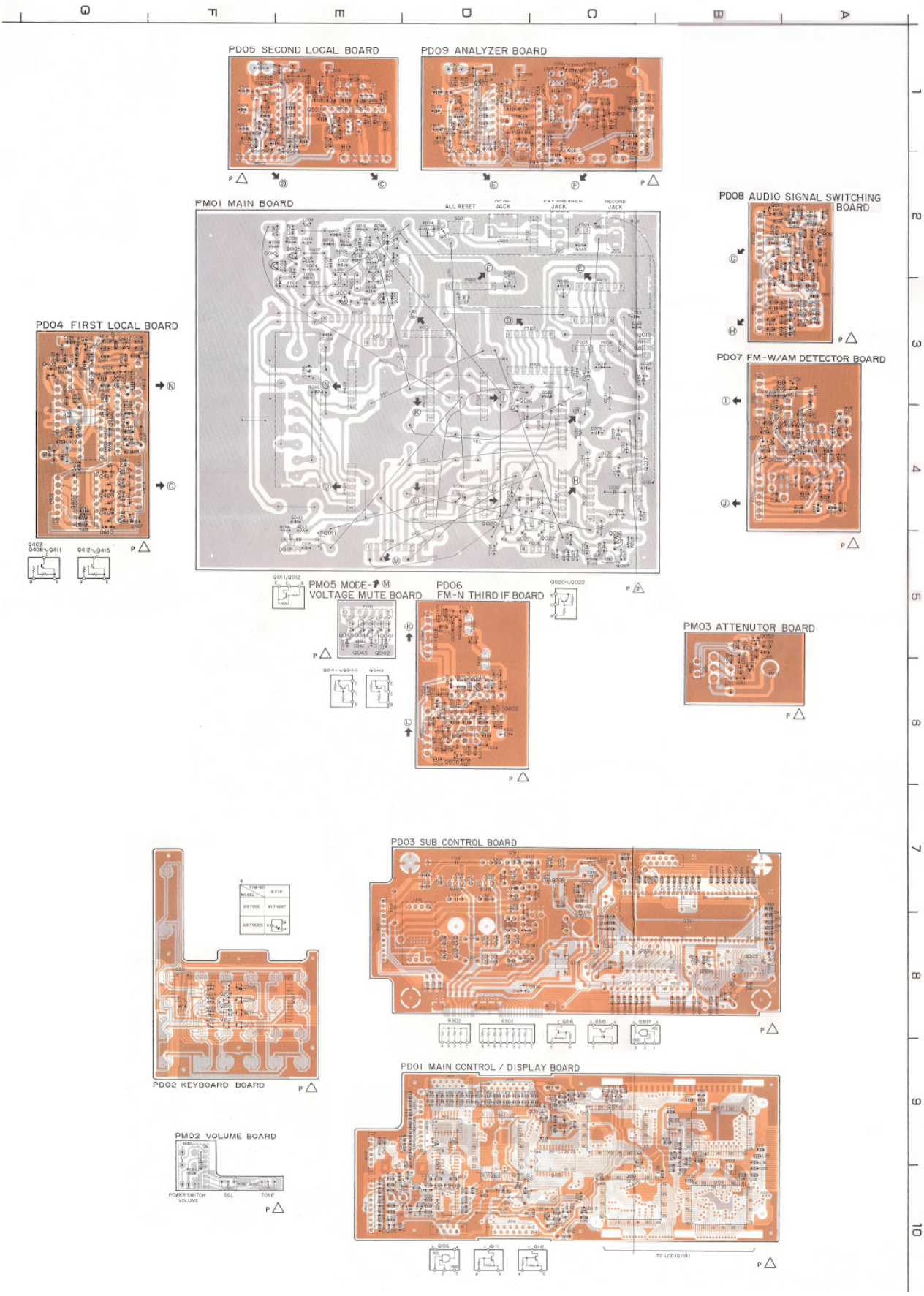
PD05 SECOND LOCAL BOARD
PD09 ANALYZER BOARD
PM01 MAIN BOARD
PD08 AUDIO SIGNAL SWITCHING BOARD
PD04 FIRST LOCAL BOARD
PD07 FM-W/AM DETECTOR BOARD
PM05 MODE-Ⓜ VOLTAGE MUTE BOARD
PD06 FM-N THIRD IF BOARD
PM03 ATTENUTOR BOARD
PD03 SUB CONTROL BOARD
PD02 KEYBOARD BOARD
PD01 MAIN CONTROL / DISPLAY BOARD
PM02 VOLUME BOARD

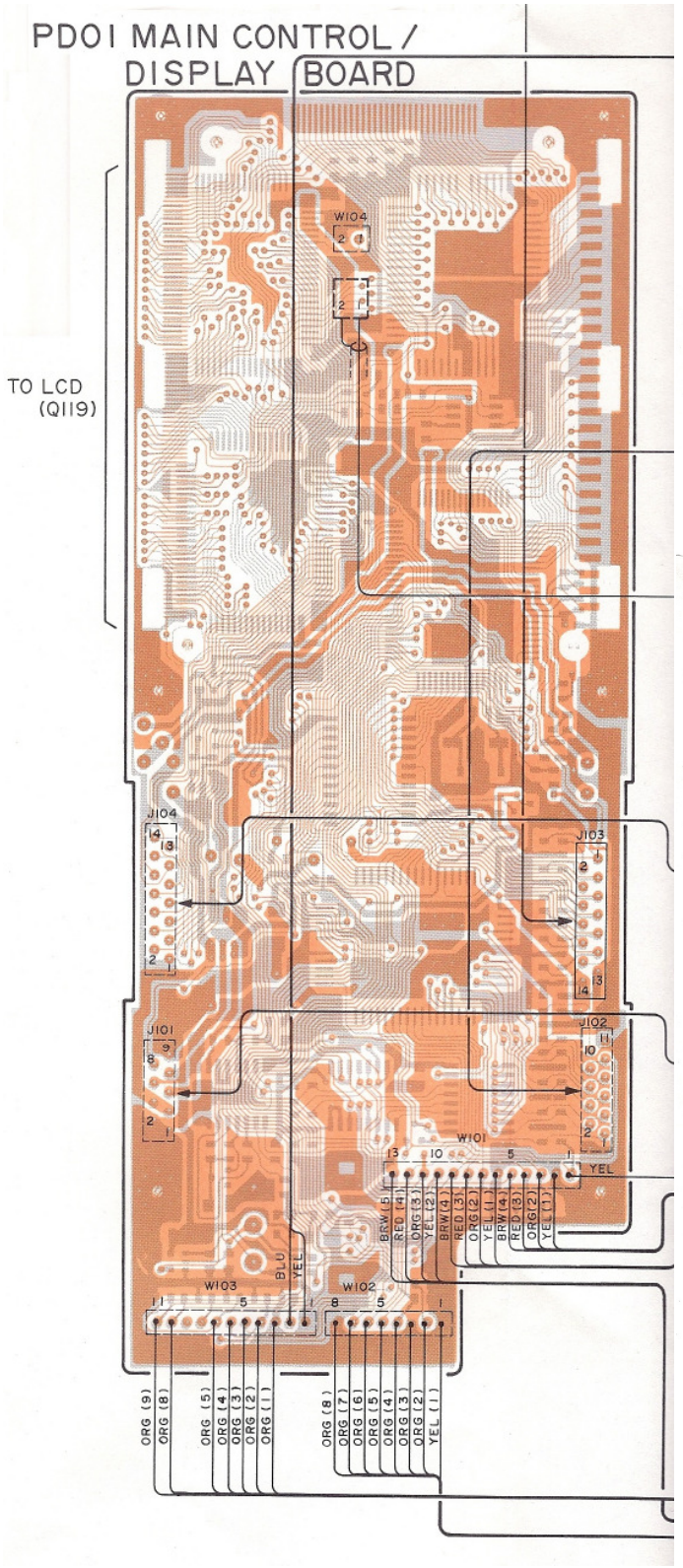
PD01 MAIN CONTROL / DISPLAY BOARD
TO LCD (Q119)
W104
J104
J101
J103
J102
W101
W103
W102
BLU
YEL
BRW (5)
RED (4)
ORG (3)
YEL (2)
BRW (4)
RED (3)
ORG (2)
YEL (1)
ORG (9)
ORG (8)
ORG (5)
ORG (4)
ORG (3)
ORG (2)
ORG (1)
ORG (8)
ORG (7)
ORG (6)
ORG (5)
ORG (4)
ORG (3)
ORG (2)
YEL (1)

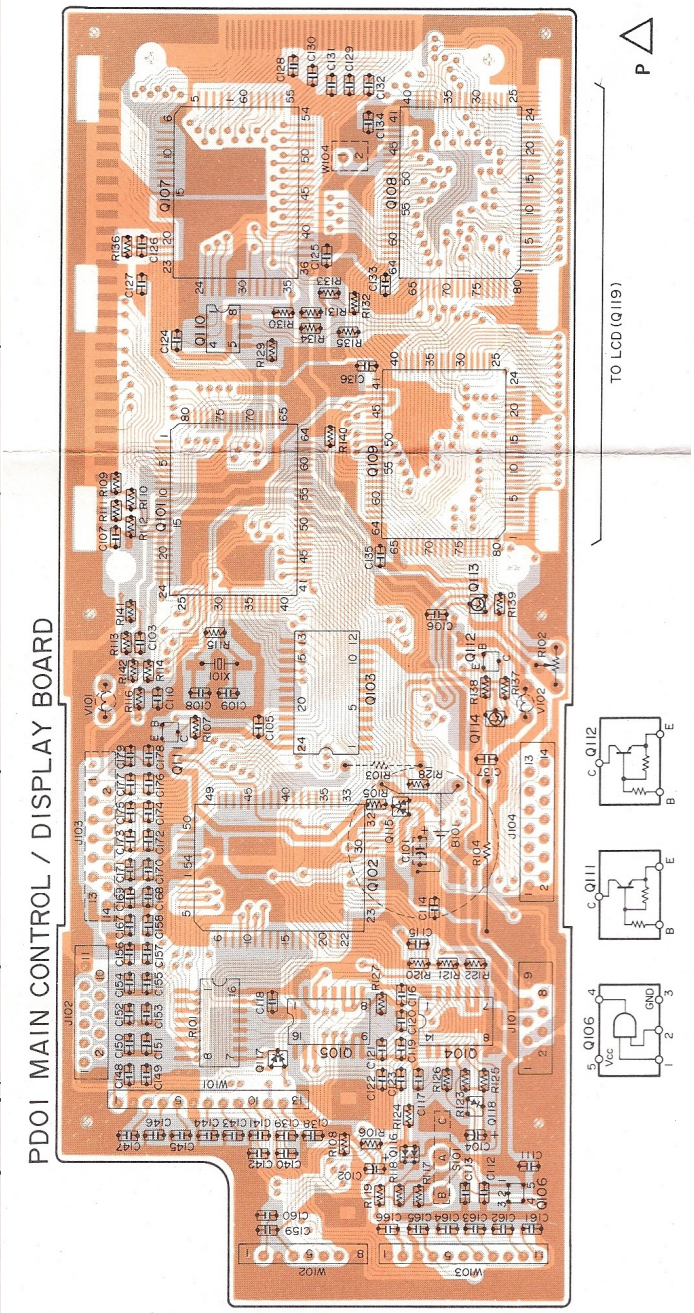
PD01 MAIN CONTROL / DISPLAY BOARD
TO LCD (Q119)
P
Q106
Q111
Q112
Vcc
GND

PD02 KEYBOARD BOARD

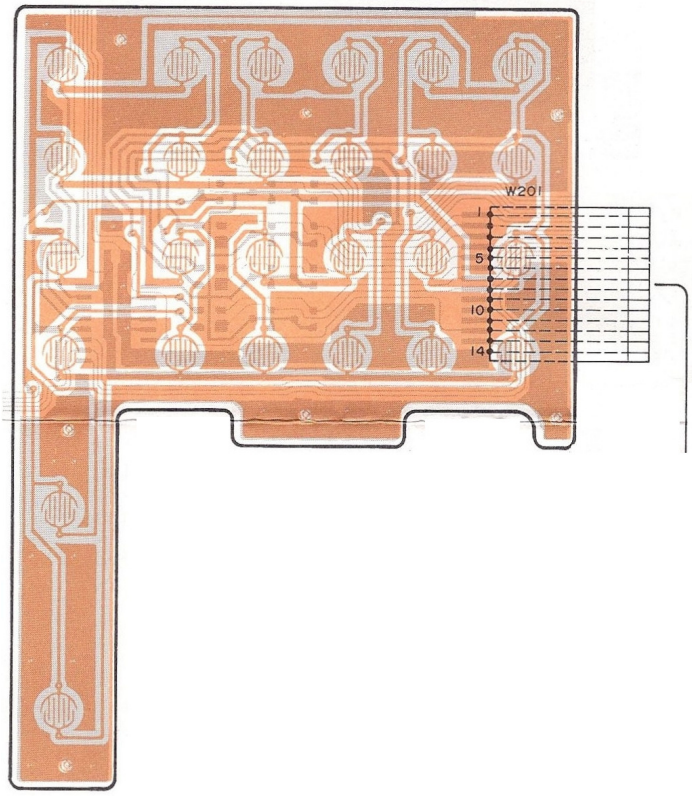

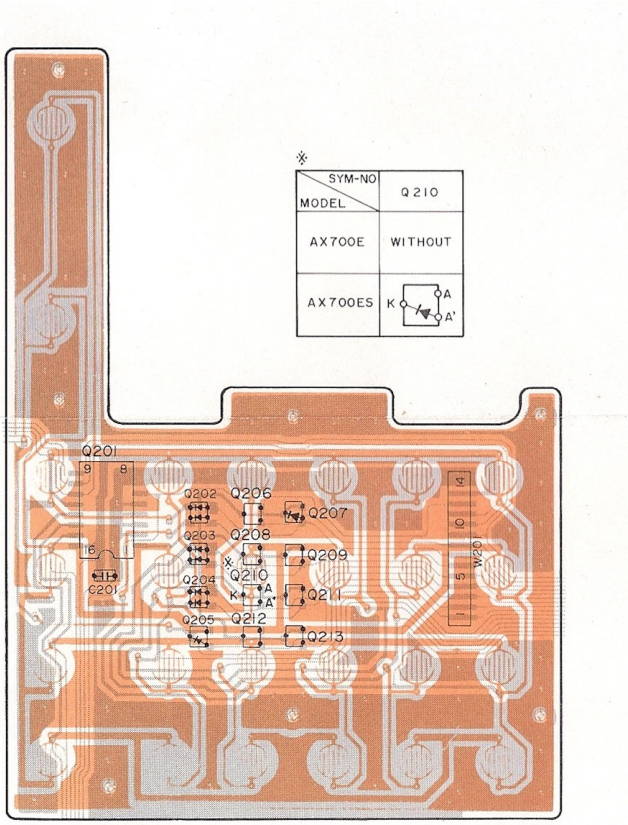

※

SYM-NO / MODEL	Q 210
AX700E	WITHOUT
AX700ES	K A A'

PD02 KEYBOARD BOARD

P △

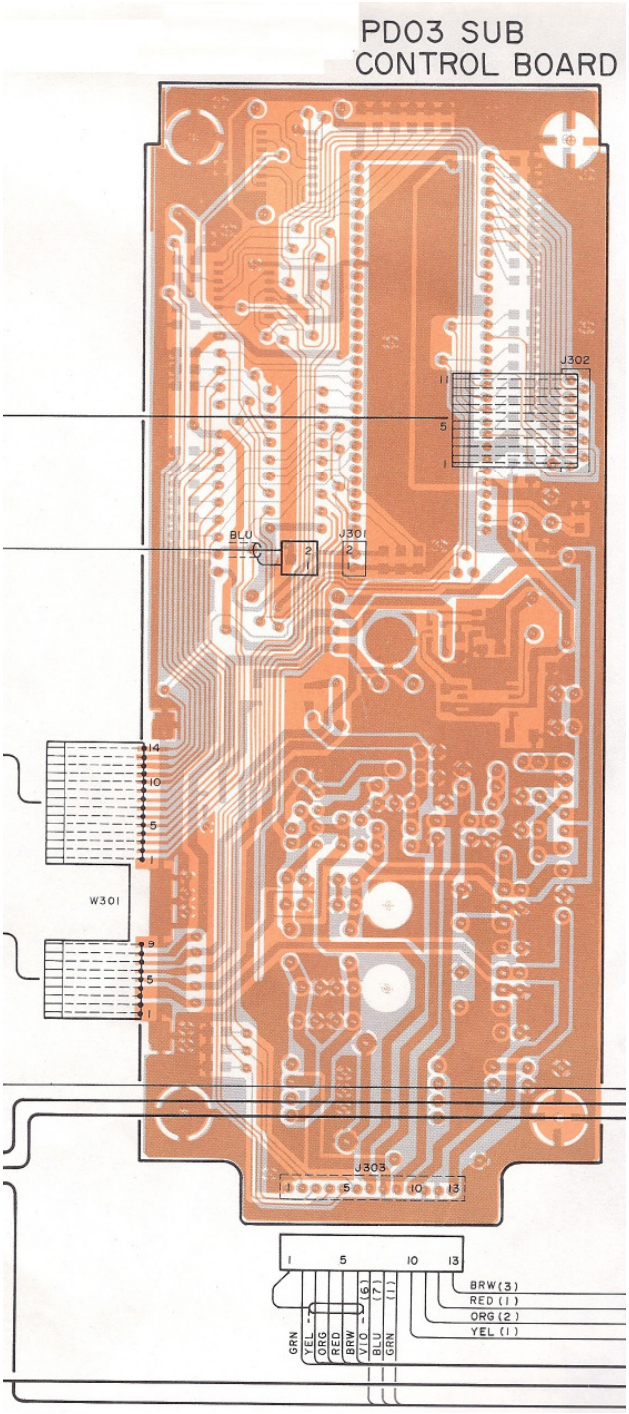
PD03 SUB
CONTROL BOARD
J302
J301
BLU
W301
J303
BRW(3)
RED (1)
ORG (2)
YEL (1)
GRN
YEL
ORG
RED
BRW
VIO
BLU
GRN

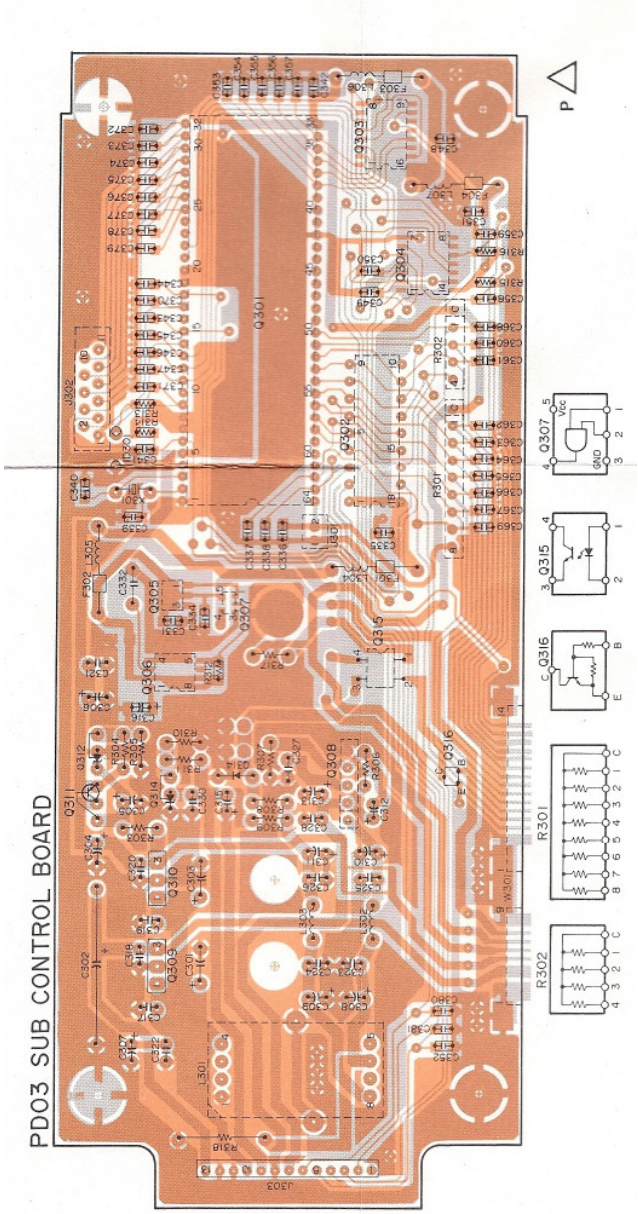
PD03 SUB CONTROL BOARD
Q301
Q303
Q307
Q315
Q316
R301
R302
W301
J303

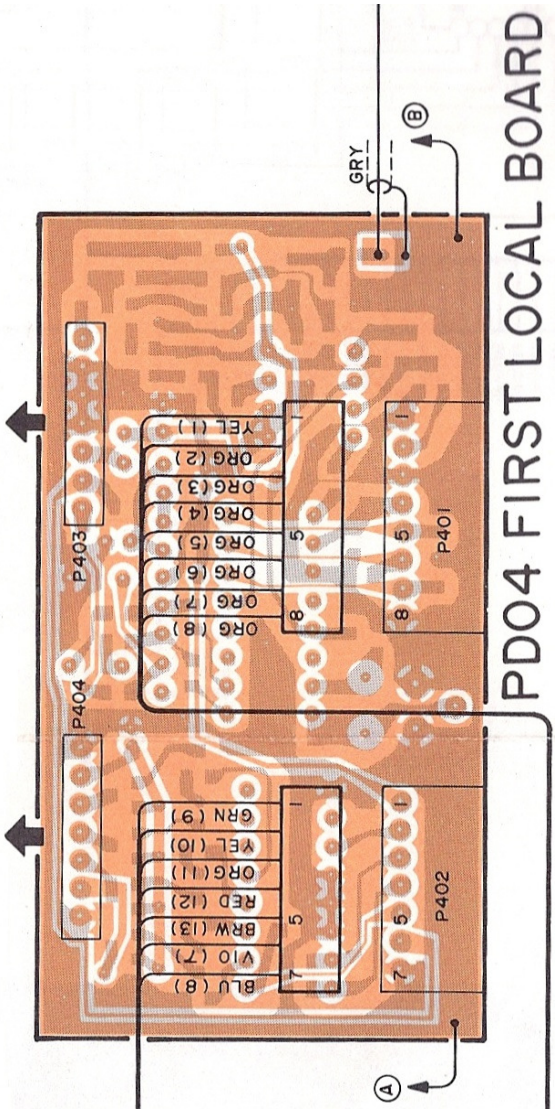
PD04 FIRST LOCAL BOARD
GRY
B
A
P401
P402
P403
P404
BLU (8)
VIO (7)
BRW (13)
RED (12)
ORG (11)
YEL (10)
GRN (9)
ORG (8)
ORG (7)
ORG (6)
ORG (5)
ORG (4)
ORG (3)
ORG (2)
YEL (1)

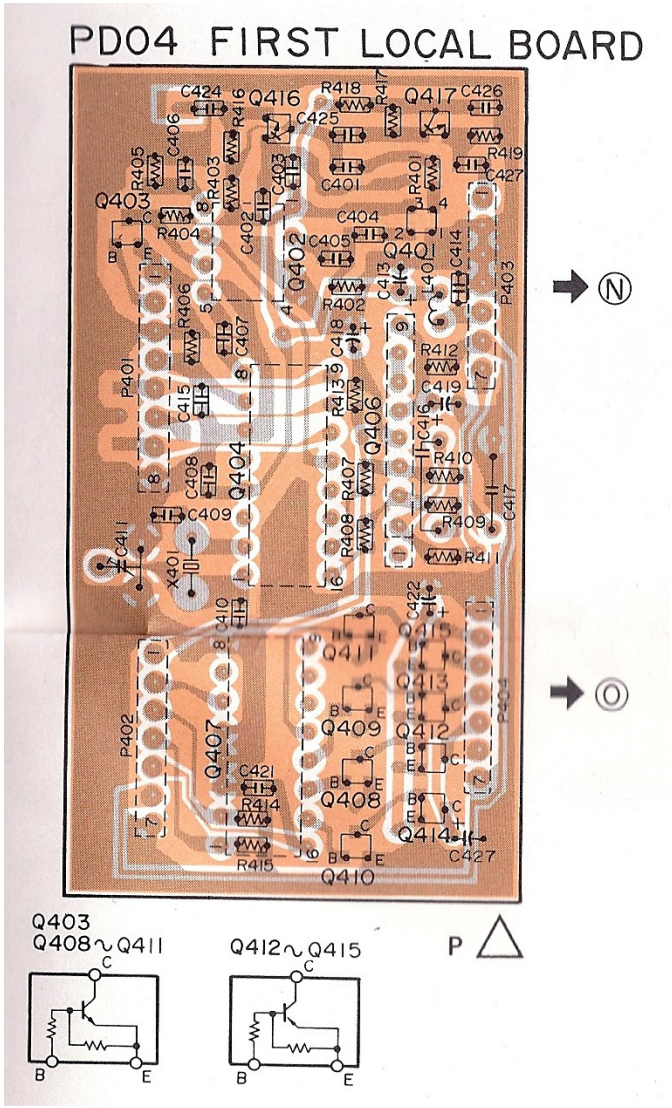
PD04 FIRST LOCAL BOARD
N
O
P
Q403
Q408∿Q411
Q412∿Q415
B
C
E

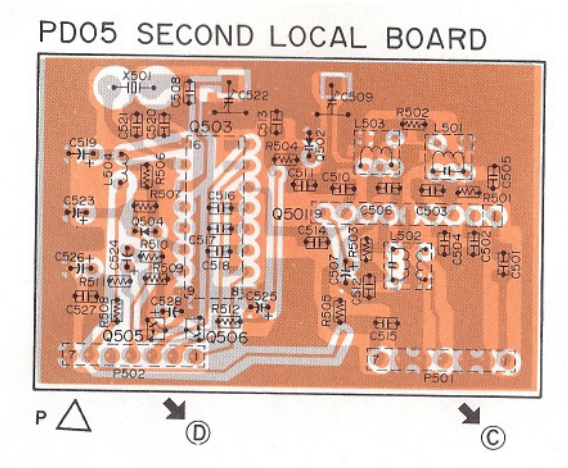
PD05 SECOND LOCAL BOARD
Q503
Q501
Q505
Q506
P502
P501
P
Ⓓ
Ⓒ

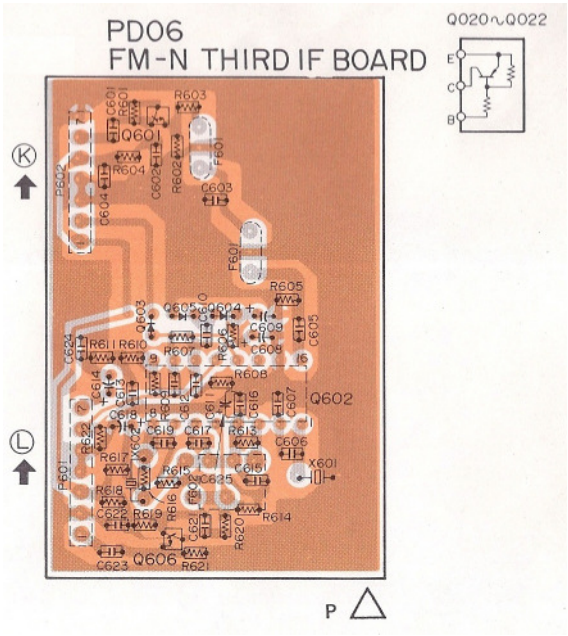
PD06
FM-N THIRD IF BOARD
Q020∿Q022
E
C
B
Ⓚ
Ⓛ
Q601
Q602
Q606
P601
P602
P
X601

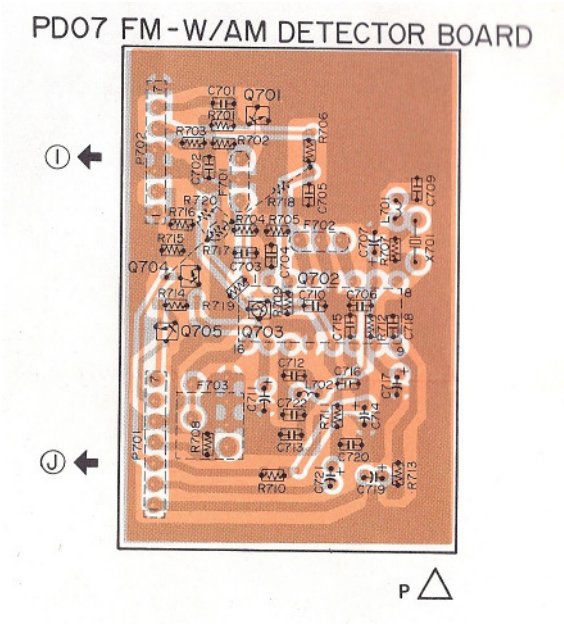
PD07 FM-W/AM DETECTOR BOARD
I
J
P

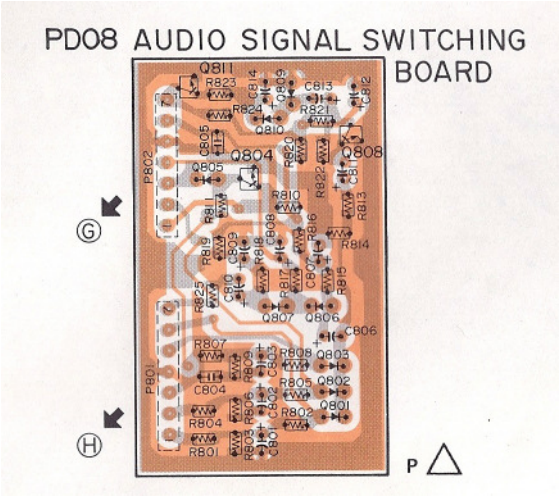
PD08 AUDIO SIGNAL SWITCHING BOARD
G
H
P

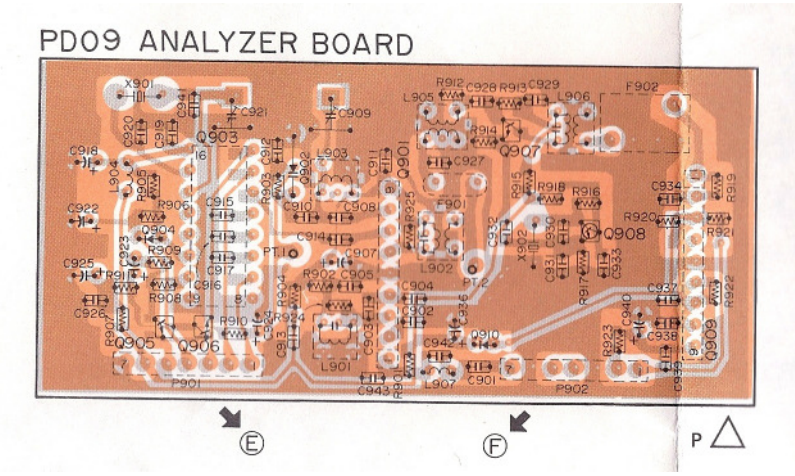
PD09 ANALYZER BOARD
E
F
P

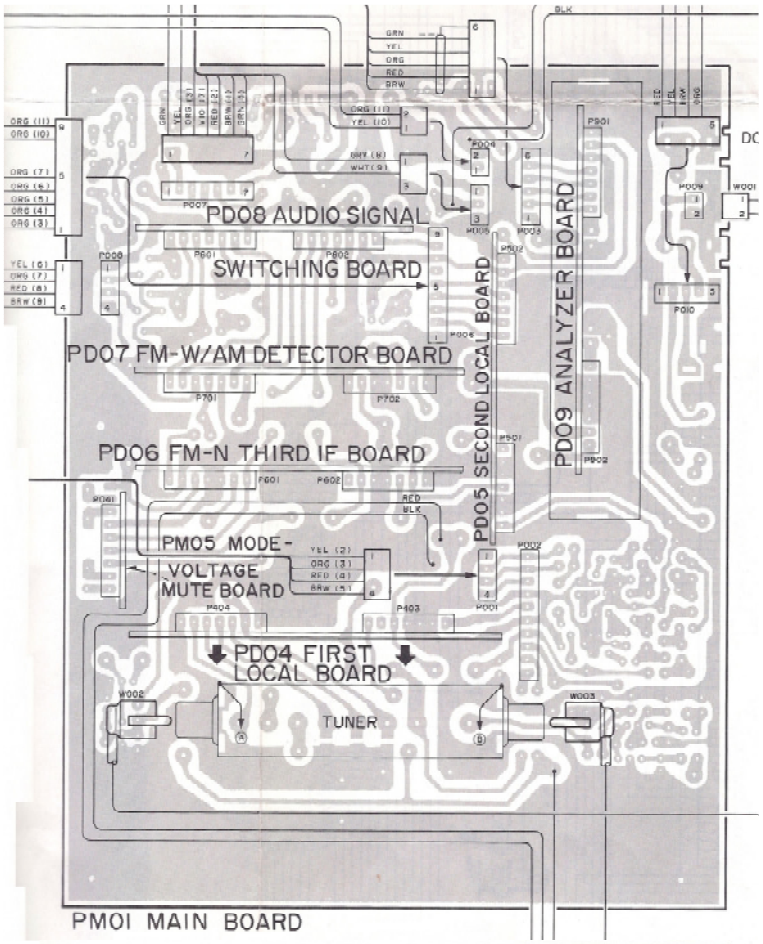
PD08 AUDIO SIGNAL
SWITCHING BOARD
PD07 FM-W/AM DETECTOR BOARD
PD06 FM-N THIRD IF BOARD
PD05 SECOND LOCAL BOARD
PD09 ANALYZER BOARD
PM05 MODE-VOLTAGE MUTE BOARD
PD04 FIRST LOCAL BOARD
TUNER
PM01 MAIN BOARD

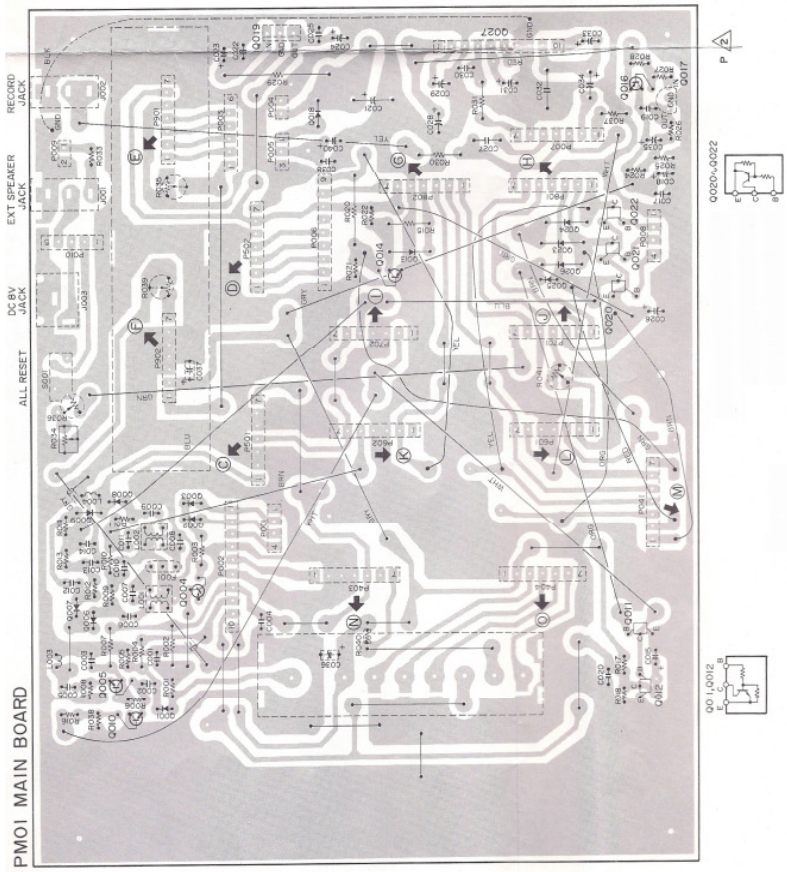
PM01 MAIN BOARD
RECORD JACK
EXT SPEAKER JACK
DC 8V JACK
ALL RESET

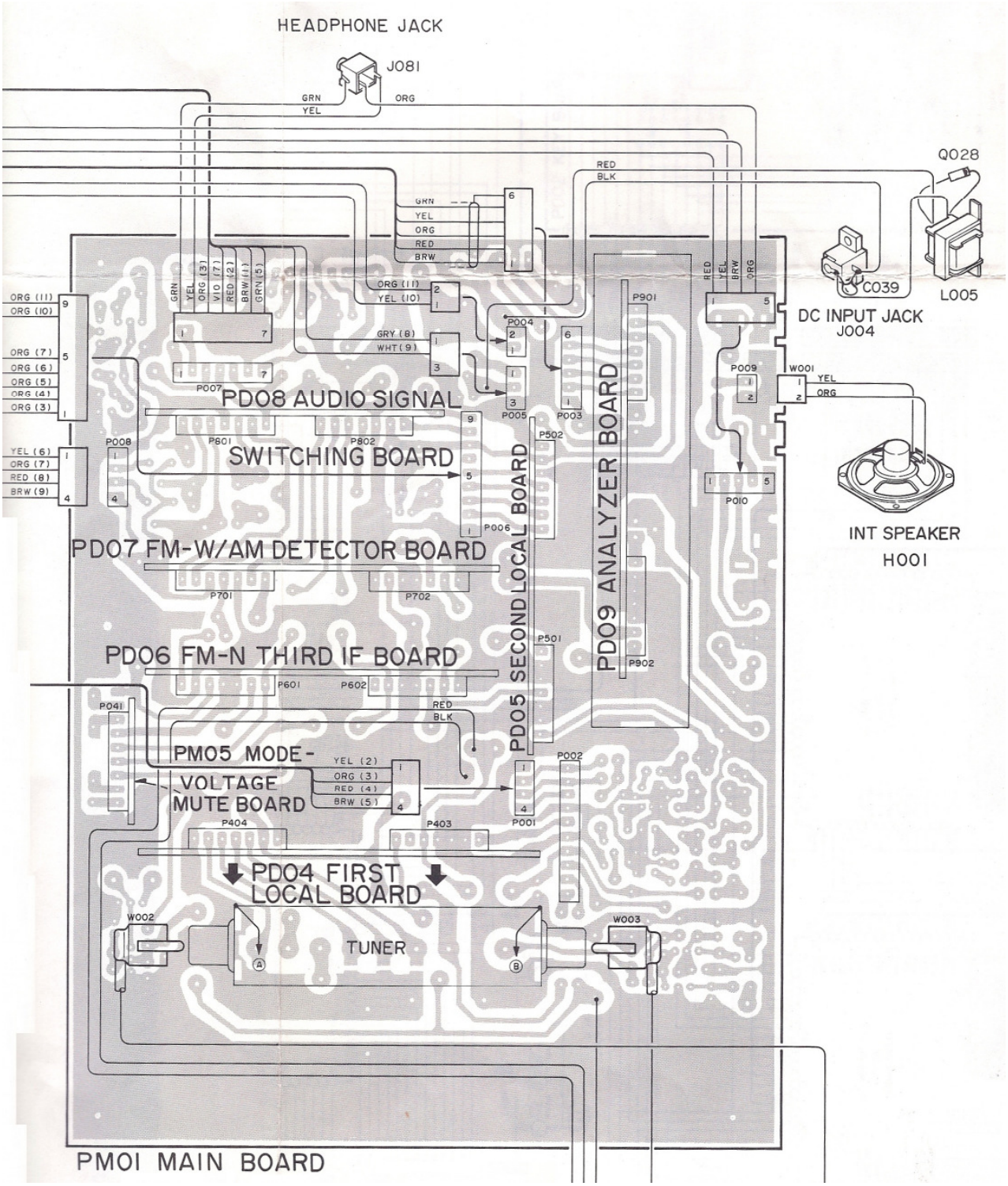
HEADPHONE JACK
J081
GRN
YEL
ORG
Q028
RED
BLK
GRN
YEL
ORG
RED
BRW
C039
L005
DC INPUT JACK
J004
ORG (11)
ORG (10)
ORG (7)
ORG (6)
ORG (5)
ORG (4)
ORG (3)
YEL (6)
ORG (7)
RED (8)
BRW (9)
GRN
YEL
ORG (3)
VIO (7)
RED (2)
BRW (1)
GRN (5)
ORG (11)
YEL (10)
GRY (8)
WHT (9)
P004
P005
P003
P901
P009
W001
YEL
ORG
P010
INT SPEAKER
H001
P007
PD08 AUDIO SIGNAL
P601
P802
P008
SWITCHING BOARD
P006
PD07 FM-W/AM DETECTOR BOARD
P701
P702
PD06 FM-N THIRD IF BOARD
P601
P602
PD05 SECOND LOCAL BOARD
PD09 ANALYZER BOARD
P502
P501
P902
P041
RED
BLK
PM05 MODE-
VOLTAGE
MUTE BOARD
YEL (2)
ORG (3)
RED (4)
BRW (5)
P002
P001
P404
P403
PD04 FIRST
LOCAL BOARD
W002
TUNER
W003
PM01 MAIN BOARD

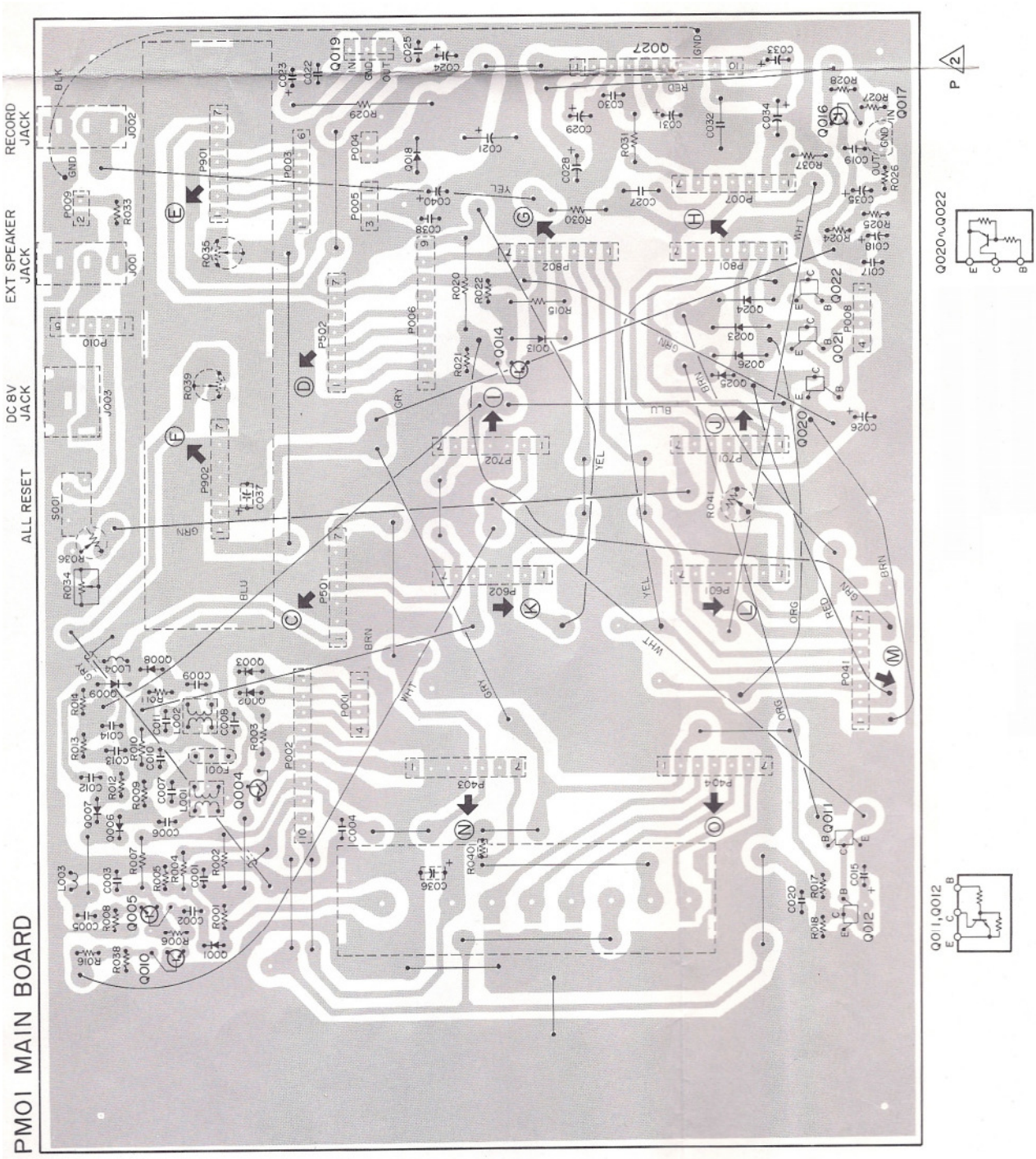
PMOI MAIN BOARD
ALL RESET
DC 8V JACK
EXT SPEAKER JACK
RECORD JACK
Q011,Q012
Q020~Q022
P 2

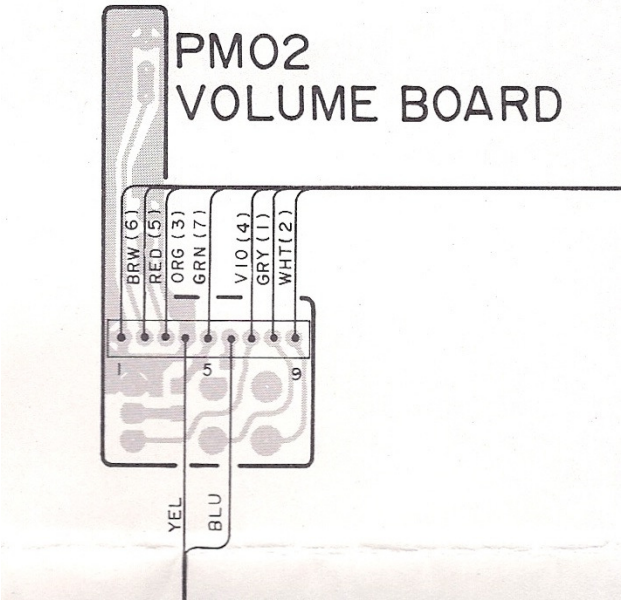
PM02
VOLUME BOARD
BRW (6)
RED (5)
ORG (3)
GRN (7)
VIO (4)
GRY (1)
WHT (2)
YEL
BLU
1
5
9

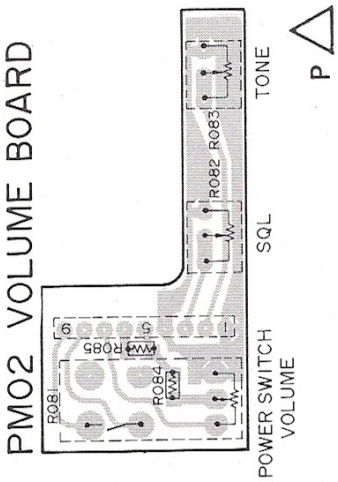
PM02 VOLUME BOARD
R081
R084
R085
R082
R083
POWER SWITCH
VOLUME
SQL
TONE
P

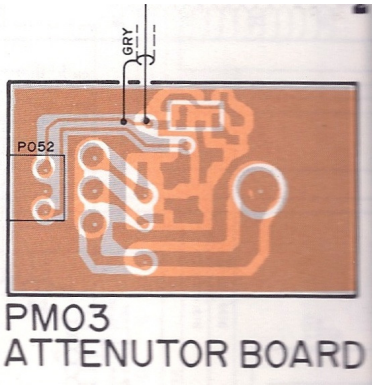
GRY
P052
PM03
ATTENUTOR BOARD

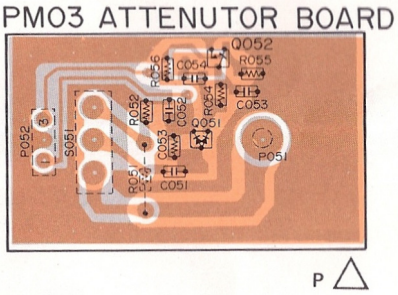
PM03 ATTENUTOR BOARD
Q052
R056
R055
C054
C053
R054
Q051
R052
C052
C053
S051
P052
P051
R053
C051
P

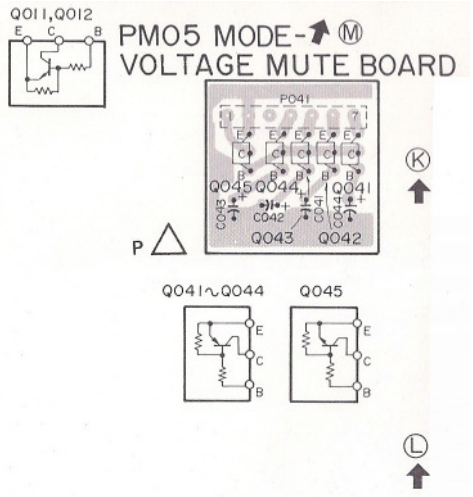
Q011,Q012
E
C
B
PM05 MODE-
VOLTAGE MUTE BOARD
P041
Q045
Q044
Q041
Q043
Q042
C043
C042
C041
C044
K
P
Q041~Q044
Q045
E
C
B
L